MODEL R182 AND TR182 SERVICE MANUAL
SECTION 19
WIRING DIAGRAMS

TABLE OF CONTENTS — Page No. Aerofiche/Manual

Circuit Function Specific Circuit Code Letters 4D6/19-2
D.C. POWER
Ground Service Receptacle 4D8/19-4
Battery Circuit 4D9/19-5
Alternator System, 60 AMP . . . 4D10/19-6
Circuit Breakers 4D11/19-7
Circuit Breakers 4D13/19-9
Alternator System, 60 AMP . . . 4D14/19-10
Alternator System, 60 AMP . . . 4D15/19-10A
Battery Circuit 3H5/19-11
Ground Service Receptacle 4D17/19-12
Circuit Breakers 4D18/19-13
Circuit Breakers 4D19/19-14
Battery Circuit 4D20/19-15
Ground Service Receptacle 4D21/19-16
Ground Service Receptacle 4D22/19-17
Alternator System, 95 AMP . . . 4D23/19-18
Circuit Breakers 4D24/19-19
Circuit Breakers 4E1/19-20
IGNITION
Ignition System 4E2/19-21
ENGINE CONTROL
Starter System 4E4/19-23
Starter System 4E5/19-24
FUEL & OIL
Fuel Pump 4E6/19-25
Electric Primer (TR182) 4E7/19-26
ENGINE INSTRUMENTS
Cylinder Head Temperature Indicator 4E8/19-27
Fuel Quantity Indicator 4E9/19-28
Carburetor Air Temperature Indicator 4E10/19-29
Hourmeter 4E11/19-30
Cylinder Head Temperature/Oil Temperature 4E13/19-32
Fuel Quantity Indicators 4E14/19-33
FLIGHT INSTRUMENTS
Turn Coordinator, Turn and Bank Indicator 4E15/19-34
MISCELLANEOUS INSTRUMENTS
Clock 4E16/19-35
Digital Clock 4E17/19-36
LIGHTING
Dome Courtesy Lights 4E18/19-37
Navigation Lights 4E19/19-38
Flashing Beacon Light 4E20/19-39
Electroluminescent Panel 4E21/19-40
Instrument Lights 4E22/19-41
Instrument Lights 4E23/19-42
Instrument Lights 4F1/19-44
Control Wheel Map Light 4F2/19-45
Strobe Lights 4F3/19-46
Landing Lights 4F4/19-47
Post Lighting 4F5/19-48
Post Lighting 4F6/19-49
Landing Lights 4F7/19-50
Ice Detector Light 4F8/19-51
Map Light Control Wheel 4F9/19-52
Map Light Control Wheel 4F10/19-52A
LANDING GEAR
Landing Gear System 4F12/19-53
Landing Gear System 4F13/19-54
Landing Gear System 4F14/19-55
Landing Gear System 4F15/19-56
Landing Gear System 4F16/19-57
HEATING, VENTILATION AND DE-ICING
Cigar Lighter 4F17/19-58
Heated Pitot/Stall Warning 4F18/19-59
Prop Anti-Ice 4F19/19-60
Prop Anti-Ice 4F20/19-61
Wing & Stabilizer De-Ice 4F21/19-62
Windshield Anti-Ice 4F22/19-63
Air Conditioner 4F23/19-64
Air Conditioner 4F24/19-65
Prop Anti-Icing 3 Blade 4G1/19-66
CONTROL SURFACES
Wing Flaps 4G2/19-67
Electric Trim 4G3/19-68
Wing Flaps 4G5/19-70
Electric Trim 4G6/19-71
Electric Trim 4G7/19-72
Electric Trim 4G8/19-73
Electric Trim 4G9/19-74
Electric Trim 4G10/19-74A
Electric Trim 4G11/19-74B
WARNING AND EMERGENCY
Landing Gear & Stall Warning System 4G12/19-75
Schematic Dual Warning Unit . 4G14/19-77
Schematic Dual Warning Unit . 4G16/19-79
Vacuum Out Warning 4G18/19-81
Standby Vacuum Pump 4G19/19-82

NOTE

Effectivity of diagrams is designated as follows: Eff thru ser (SRXXXX) denotes effectivity to the serial number prior to the (SRXXXX) serial. Ser (SRXXXX) & on denotes effecitvity for the (SRXXXX) serial and on. Diagrams and/or portions of, may be individually serialized and not designated by a (SRXXXX) number.

CIRCUIT FUNCTION AND SPECIFIC CIRCUIT CODE LETTERS

A - Armament
B - Photographic
C - Control Surface
  CA - Automatic Pilot
  CC - Wing Flaps
  CD - Elevator Trim
D - Instrument (Other Than Flight or Engine Instrument)
  DA - Ammeter
  DB - Flap Position Indicator
  DC - Clock
  DD - Voltmeter
  DE - Outside Air Temperature
  DF - Flight Hour Meter
E - Engine Instrument
  EA - Carburetor Air Temperature
  EB - Fuel Quantity Gage and Transmitter
  EC - Cylinder Head Temperature
  ED - Oil Pressure
  EE - Oil Temperature
  EF - Fuel Pressure
  EG - Tachometer
  EH - Torque Indicator
  EJ - Instrument Cluster
F - Flight Instrument
  FA - Bank and Turn
  FB - Pitot Static Tube Heater and Stall Warning Heater
  FC - Stall Warning
  FD - Speed Control System
  FE - Indicator Lights
G - Landing Gear
  GA - Actuator
  GB - Retraction
  GC - Warning Device (Horn)
  GD - Light Switches
  GE - Indicator Lights
H - Heating, Ventilating and De-Icing
  HA - Anti-icing
  HB - Cabin Heater
  HC - Cigar Lighter
  HD - De-ice
  HE - Air Conditioners
  HF - Cabin Ventilation
J - Ignition
  JA - Magneto
K - Engine Control
  KA - Starter Control
  KB - Propeller Synchronizer
L - Lighting
  LA - Cabin
  LB - Instrument
  LC - Landing
  LD - Navigation
  LE - Taxi
  LF - Rotating Beacon
  LG - Radio
  LH - De-ice
  LJ - Fuel Selector
  LK - Tail Floodlight
M - Miscellaneous
  MA - Cowl Flaps
  MB - Electrically Operated Seats
  MC - Smoke Generator
  MD - Spray Equipment
  ME - Cabin Pressurization Equipment
  MF - Chem O_2 - Indicator
P - D.C. Power
  PA - Battery Circuit
  PB - Generator Circuits
  PC - External Power Source
Q - Fuel and Oil
  QA - Auxiliary Fuel Pump
  QB - Oil Dilution
  QC - Engine Primer
  QD - Main Fuel Pumps
  QE - Fuel Valves
R - Radio (Navigation and Communication)
  RA - Instrument Landing
  RB - Command
  RC - Radio Direction Finding
  RD - VHF
  RE - Homing
  RF - Marker Beacon
  RG - Navigation
  RH - High Frequency
  RJ - Interphone
  RK - UHF
  RL - Low Frequency
  RM - Frequency Modulation
  RP - Audio System and Audio Amplifier
  RR - Distance Measuring Equipment (DME)
  RS - Airborne Public Address System
S - Radar
U - Miscellaneous Electronic
  UA - Identification - Friend or Foe
W - Warning and Emergency
  WA - Flare Release
  WB - Chip Detector
  WC - Fire Detection System
X - A.C. Power

FUNCTION CIRCUITS	GAUGE	BASE COLOR (or solid)	STRIPE COLOR
A + Power	16	Red	None
	18	Red	Black
		Red	White
	20	Red	Green
	22	Red	Yellow
Ground	16	Black	None
	18	Black	White
Mike Ground	22	Black	None
Radio Lights Dim	18	Yellow	None
Mike Audio	22	Tan	None
		Tan (Shielded)	None
Mike Key	22	White	Black
Radio Speaker	20	Green	None
Headphones	22	Blue	None
Dev + •	22	Gray	Red
Dev - •	22	Gray	Green

- "Dev+" and "Dev-" circuits are for use in Nav-o-matic 300 autopilots and any associated omni indicator circuit to which it connects.

NOTE

All other color coded wires are for general use in multi-conductor radio and autopilot harness assemblies.

CROSS REFERENCE LISTING OF SERIAL REQUEST NUMBERS LISTED ON DIAGRAMS VS. AIRCRAFT SERIAL NUMBERS.

SR. NO.	AIRCRAFT SERIAL NO.
SR8462	R18200001 - FR18200001
SR8782	R18200584 - FR18200026
SR8970	R18200004 - FR18200001
SR8982	R18200584
SR8995	R18200428 - FR18200021
SR9087	R18200508
SR9112	R18201314 - FR18200046
SR9140	R18200509
SR9187	R18200584
SR9195	R18200670
SR9215	R18201090 - FR18200046
SR9369	R18204520 - FR18200021
SR9429	R18200961
SR9437	R18200800 - FR18200046

SR. NO.	AIRCRAFT SERIAL NO.
SR9554	R18201470
SR9583	R18201230
SR9632	R18201629
SR9738	R18201542
SR9799	R18201629 - TR1822006
SR9828	R18201752
SR9853	R18201696
SR9951	R18201799
SR10003	R18201799
SR10068	R18201799
SR10099	R18201929
SR10122	R18201799
SR10152	R18201799
SR10213	R18201809
SR10415	R18202000
SR10837	R18202009

REVISION			
LET	DESCRIPTION	DATE	APPD
A	BY REV: PA10(REF) WAS PA1(REF) (SR8782)	CS 8-3-78	JB

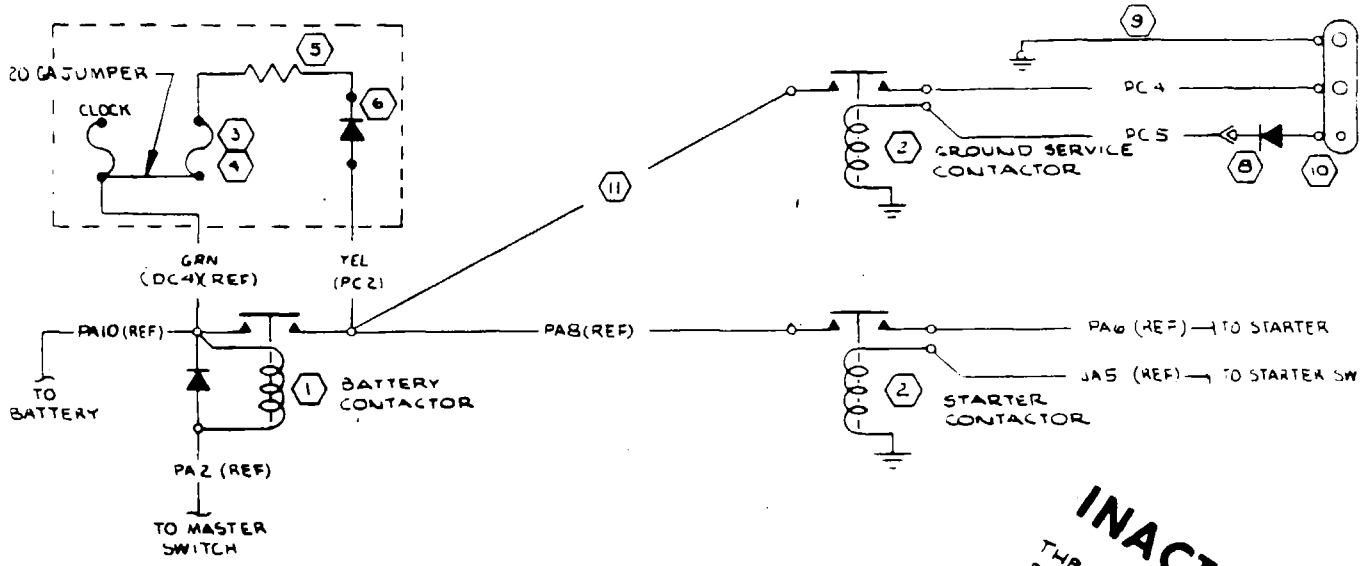

INACTIVE
THRU SER (SR 9215)
D D HAYN
12-11-78

PC5	22			S-1367-10	S-1993-1		
PC4	4	S-1562-4-9		S-1361-6-9	S-1361-6-13		
(PC2)	22	22-4		SOLDER	S-361-13		
WIRE CODE NO	GA	MATERIAL	LG	TERMINALS			SERIALS

WIRE TABLE

1	1553112	BUS BAR ASSY	
10	MS 3506-1	RECEPTACLE	
9	0312155	GND STRAP	
8	1570045	DIODE BOARD ASSY	
6	20H3P	DIODE	
5	1-26263	.75 Ω RESISTOR	
4	S-1090-2	FUSE HOLDER	
3	S-1091-5	FUSE	
2	S-1577-1	CONTACTOR	
1	S-1580-1	CONTACTOR	
ITEM NO.	PART NO.	DESCRIPTION	

EQUIPMENT TABLE

CES-1000 IS APPLICABLE
VENDOR CODES PER S-1400
CES-XXXX=CESSNA SPEC. NO.
S-XXX OR CMXXXX=CESSNA STD. NO.

SUPERSEDES:

SUPERSEDED BY: 2270001 P 4.7

CONTRACT NO:

	NAME	DATE
DESIGN	SPENCER	3-28-77
GROUP	W H Hardin	4-13-77
DRAWN	R SWANSON	3-6-77
CHECK	J. YOUEL	3-18-77
STRESS		
PROJ	J. MOORE	4-14-77
APPD		
OTHER		

Cessna AIRCRAFT CO.
PAWNEE DIVISION
5800 E. PAWNEE
WICHITA, KANSAS

TITLE
WIRING DIAGRAM — GROUND SERVICE RECEPTACLE (OPT)

SIZE	CODE IDENT. NO.	DWG NO
C	71379	2270001

SCALE: NONE (SR 8962) PAGE: 4.1

REVISION			
LET	DESCRIPTION	DATE	APPD
A	BY REV: S-1360-15L WAS S-1232-30L; ADD PA8, 1553112 WAS ON S-1577-1; S-1367-4-8/DA1 WAS S-1367-4-14; C669545-0102 WAS C669502-0211 (SR8462)(REF) (SR8782) C614001-0105 WAS -0101 (SR9089)	DLP 2-15-78 CRS	JAB
B	BY REV: C614002-0101 WAS C614001-0105 (SR9087)	CRS 4-25-78	JAB
C	BY REV: ADD DETAIL "A"; SER, PA10 & PA11 (SR8782)	CS 8-3-78	JAB
D	BY REV: PA11 TERM WAS S-1367-6-13 / S-1367-6-13 (NOW SHOP PRACTICE) INACT DWG (SR9215)	D HAUN 12-11-78	JAB

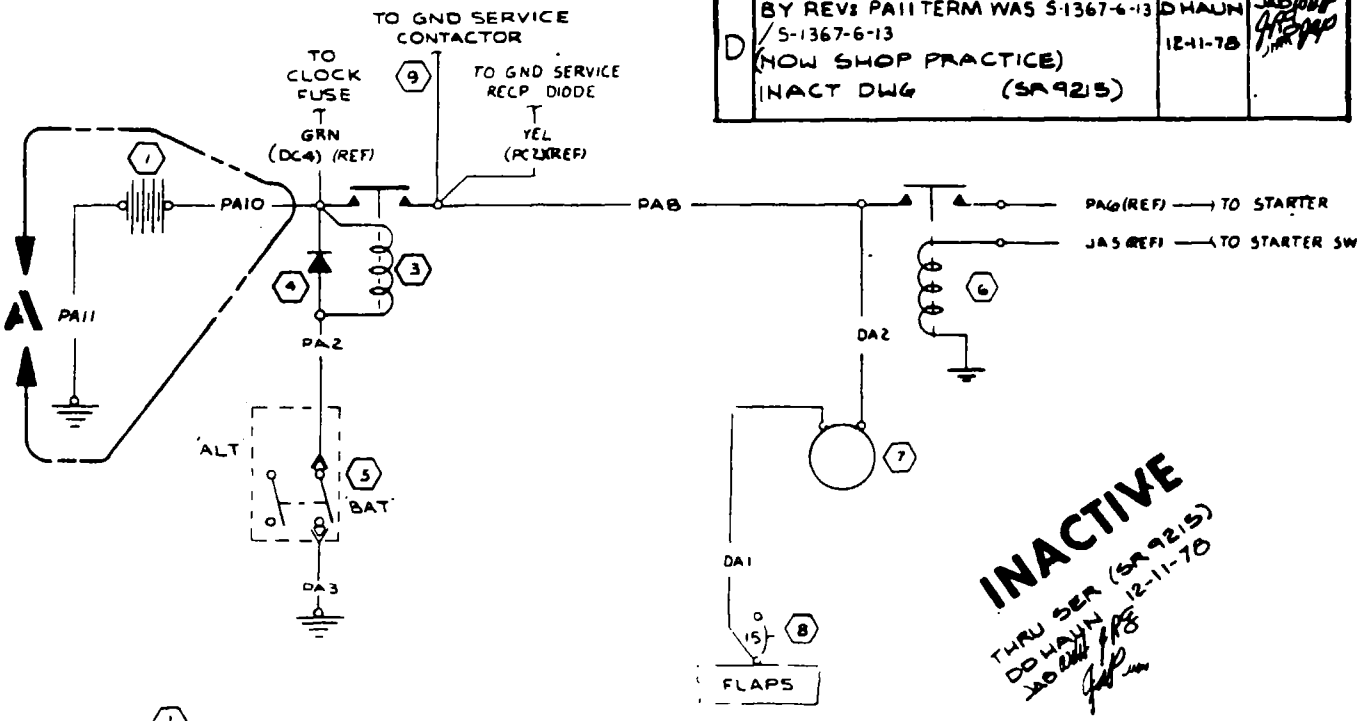

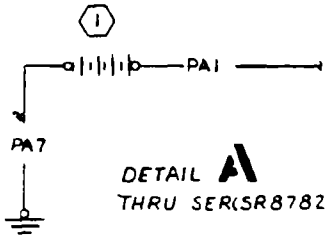

DETAIL A
THRU SER(SR8782)

PA11	4	S-1562-4-9		S-1367-4-13	S-1367-4-12		SER(SR8782) & ON
PA10	4	S-1562-4-9		S-1367-6-13	S-1367-6-13		SER(SR8782) & ON
PA8	4	S-1562-4-9		S-1367-6-13	S-1367-6-13		
PA7	4	S-1562-4-9	24	S-1367-6-13	S-1367-6-13		THRU SER(SR8782)
PA3	22		9	S-1493-1	S-1367-1-8		
PA2	22		85	S-1367-1-10	S-1493-1		
PA1	4	S-1562-4-9	16	S-1367-6-13	S-1367-6-13		THRU SER(SR8782)
DA2	8	S-1562-8-9	72	S-1367-4-10	S-1367-4-10		
DA1	8	S-1562-8-9	41	S-1367-4-10	S-1367-4-8		
WIRE CODE NO	GA	MATERIAL	LG	TERMINALS			SERIALS

WIRE TABLE

ITEM NO	PART NO.	DESCRIPTION
9	1553112	BUS BAR ASSY
8	S-1360-15L	CKT BKR
7	C669545-0102	INST CLUSTER
6	S-1577-1	STARTER CONTACTOR
5	S-1994-1-1	SWITCH
4	077072B	DIODE ASSY
3	S-580-1	BAT. CONTACTOR
2		
1	C614002-0101	BATTERY ASSY

EQUIPMENT TABLE

CES-1000 IS APPLICABLE
VENDOR CODES PER S-1400
CES-XXXX-CESSNA SPEC. NO
S-XXX OR CMXXXX-CESSNA
STD. NO.

SUPERSEDES:

SUPERSEDED BY: 2270001 PA.6

CONTRACT NO.

	NAME	DATE
DESIGN	SPENCER	3-28-77
GROUP	[illegible]	4-13-77
DRAWN	SCHIFFELBEIN	3-16-77
CHECK	J. YOUEL	3-18-77
STRESS		
PROJ	J. MOONEY	4-[illegible]-7
APPD	[illegible]	
OTHER		

Cessna AIRCRAFT CO.
PAWNEE DIVISION
3800 E. PAWNEE
WICHITA, KANSAS

TITLE
WIRING DIAGRAM —
BATTERY CIRCUIT

SIZE	CODE IDENT NO	DWG NO
C	71379	2270001

SCALE: NONE (SR8462) PAGE: 4 2

NOTE:
1. THIS CAPACITOR IS TO BE ADDED ONLY WHEN REQD TO PREVENT OVERVOLT SENSOR TRIP-OUT DURING GEAR CYCLING & IS TO BE INSTALLED ONLY WITH THE C593003-0101 OVERVOLT SENSOR

NOTE:
1. THIS CAPACITOR IS TO BE ADDED ONLY WHEN REQD TO PREVENT OVERVOLT SENSOR TRIP-OUT DURING GEAR CYCLING AND IS TO BE INSTALLED ONLY WITH THE C593003-0101 OVERVOLT SENSOR.

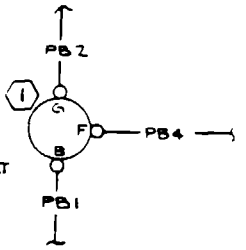

DETAIL A
THRU SER (SR9014)

REVISION			
LET	DESCRIPTION	DATE	APPD
A	BY REV: ADDED DETAIL A SER IN PB5 & PB10, SER OUT PB1 & PB2 (SR 9014) S-1493-1/PB6 WAS S-1493-2 S-1367-4-12/PB2 WAS S-1367-4-10 (NOW SHOP PRACTICE) R182 E0655 DWG BECOMES INACT (SR 8782)	2-15-78	JJB
B	BY REV: ADDED NOTE 1 & TVA 1315, S-1636-1/PB7 WAS S-1635-1, S-1636-2/PB3, PB8 WAS S-1635-2, S-1638-2/C593003-0101 WAS S-1638-1 (NOW SHOP PRACTICE) (MER182-E0653) ADDED C593003-0103 (ALT), C611004-0101 (ALT)/(REF) (SR 9140)	TFS 4-12-78 LSS	JAB

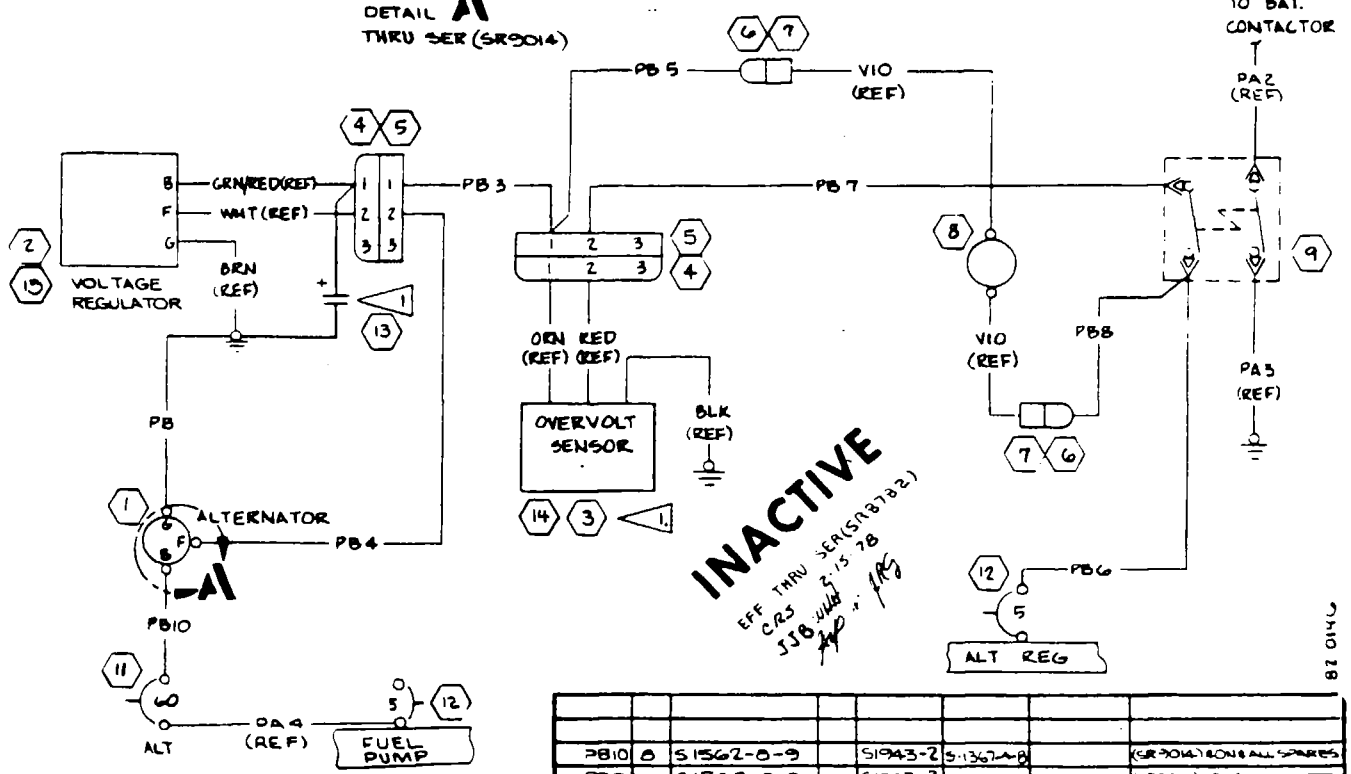

PB10	8	S1562-8-9		S1943-2	S-1367-4-8		(SR 9014) & ON & ALL SPARES
PB9	8	S1562-8-9		S1943-3	S-1367-4-12		(SR 9014) & ON & ALL SPARES
PB8	22			SEE PB6	S-1635-1		
PB7				S-1493-1	S-1636-1		THRU (SR 8782)
PB6				S-1367-1-6	S-1493-1		
PB5				SEE PB3	S-1635-1		THRU (SR 8782)
PB4				S-1636-1	S1367-1-10		
PB3	22			S-1636-2	S-1636-1		THRU (SR 8782)
PB2	8	S-1562-8-9		S-1367-4-10	S-1367-4-12		THRU (SR 9014)
PB1	8	S-1562-8-9		S-1367-4-12	S-1367-4-10		THRU (SR 9014)
WIRE CODE NO.	GA	MATERIAL	LG	TERMINALS			SERIALS

WIRE TABLE

15	C611004-0101	VOLTAGE REGULATOR (ALT)	
14	C593003-0103	OVERVOLT SENSOR (ALT)	
13	TVA1315	CAPACITOR	1
12	S-1360-5L	CIRCUIT BREAKER	
11	S-1707-60	CIRCUIT BREAKER	
9	S-1994-1-1	MASTER SWITCH	
8	S-2135-2	LAMP ASSY	
7	S-1637-2	HOUSING	
6	S-1637-1	HOUSING	
5	S-1638-1	HOUSING	
4	S-1638-2	HOUSING	
3	C593003-0101	OVERVOLT SENSOR	1
2	C611002-0105	VOLTAGE REGULATOR	
1	C611503-0102	ALTERNATOR	
ITEM NO.	PART NO.	DESCRIPTION	

EQUIPMENT TABLE

CONTRACT NO:

	NAME	DATE
DESIGN	SPENCER	3-28-77
GROUP	D.H. Hunter	6-13-77
DRAWN	HARVEY	3-16-77
CHECK	D. YOUEL	5-18-77
STRESS		
PROJ	J.H. MOORE	4-14-77
APPD	JRB	
OTHER		

Cessna AIRCRAFT CO.
PAWNEE DIVISION
5800 E PAWNEE
WICHITA KANSAS

TITLE
WIRING DIAGRAM — ALTERNATOR SYSTEM, 60 AMP

SIZE	CODE IDENT. NO.	DWG NO
C	71379	2270001

SCALE: NONE (SR 8462) PAGE: 4.5

CES-1000 IS APPLICABLE
VENDOR CODES PER S-1400
CES-XXXX-CESSNA SPEC. NO.
S-XXX OR CMXXXX-CESSNA STD. NO.

SUPERSEDES:

SUPERSEDED BY: 2270001 PG 4.5

REVISION			
LET	DESCRIPTION	DATE	APPD
A	BY REV GEAR PUMP BKR WAS ON BUS BAR, ADD PA9 DA1 WAS TO "GEAR PUMP" BKR; S-1367-4-8/PA4 WAS S-1367-4-6; S-1367-3-8/PA5 WAS S-1367-3-10 (SR8462)(REP)	DLP 10-18-77	JAB
B	BY REV: NOTE 1 WAS "INSTALL 18.0 IN OF IMPERIAL EASTMAN (30327) POLY-FLO TUBING 66-P-3/8" (NOW SHOP PRACTICE)	RLY 4-25-78	JAB
C	BY REV: ADD DETAIL A & SHT 4.4.1. (SR 8982)	PSM 2-19-79	

NOTES:

1. INSTALL S-1071-3-18.0 TUBING OVER PA5 WIRE BEFORE INSTALLING TERMINALS

INACTIVE
EFF THRU SER (SR 9112)
PSM 2-19-79
JAB

PA9	12			S-1367-3-8	S-1367-3-6		
PA4	8	S-1562-8-9	2	S-1367-4-8	S-1367-4-8		
PA5	10	S-1562-10-9	16	S-1367-3-8	S-1367-3-8		
WIRE CODE NO	GA	MATERIAL	LG	TERMINALS			SERIALS

WIRE TABLE

3	2270001	BUS BAR	
7	S-1360-15L	CIRCUIT BREAKER	
6	S-1360-10L	CIRCUIT BREAKER	
5	S-1360-5L	CIRCUIT BREAKER	
4	S-1707-60	CIRCUIT BREAKER	
3	S-1232-30L	CIRCUIT BREAKER	
2	270831	BUS BAR	
1	S-2281-1	SWITCH	
ITEM NO	PART NO	DESCRIPTION	

EQUIPMENT TABLE

CES-1000 IS APPLICABLE
VENDOR CODES PER S-1400
CES XXXX-CESSNA SPEC. NO.
S-XXX OR CMXXXX-CESSNA STD. NO.

SUPERSEDES.

SUPERSEDED BY: 4808481

CONTRACT NO.

	NAME	DATE
DESIGN	SPENCER	3-28-77
GROUP	W H Hunsicker	1-13-77
DRAWN	SCHIFFELBEIN	3-16-77
CHECK	J YOUEL	3-18-77
STRESS		
PROJ	L L MOORE	4-14-77
APPD		
OTHER		

Cessna AIRCRAFT CO.
PAWNEE DIVISION
5800 E PAWNEE
WICHITA KANSAS

TITLE
WIRING DIAGRAM —
CIRCUIT BREAKERS

SIZE	CODE IDENT NO	DWG NO
C	71379	2270001

SCALE NONE (SR 8462) PAGE - -

Circuit Breakers (Sheet 1 of 2)

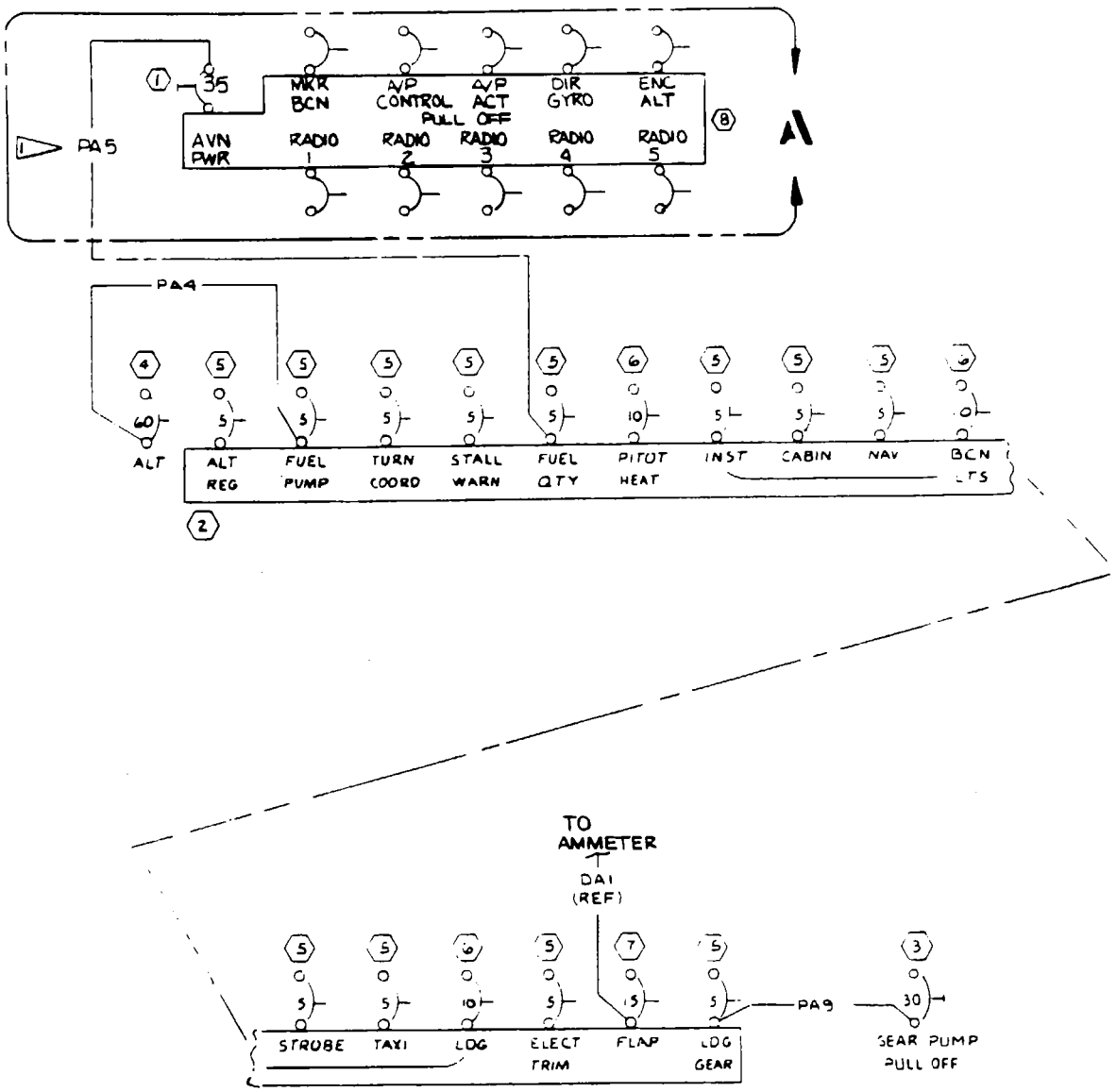

CONTRACT NO:			Cessna. AIRCRAFT CO. PAWNEE DIVISION 5800 E. PAWNEE WICHITA, KANSAS
	NAME	DATE	TITLE WIRING DIAGRAM — CIRCUIT BREAKERS
DESIGN	SPENCER	3-28-77	
GROUP	W. Hamilton	4-13-77	
DRAWN	SCHIFFELBEIN	3-16-77	
CHECK	J. YOUEL	3-18-77	
STRESS			
PROJ	J.H. MOORE	4-14-77	SIZE C / CODE IDENT. NO. 71379 / DWG NO 2270001
APPD	[illegible]		
OTHER			SCALE: NONE / (SR8462) / PAGE: 4.4

Circuit Breakers (Sheet 2 of 2)

REVISION			
LET	DESCRIPTION	DATE	APPD

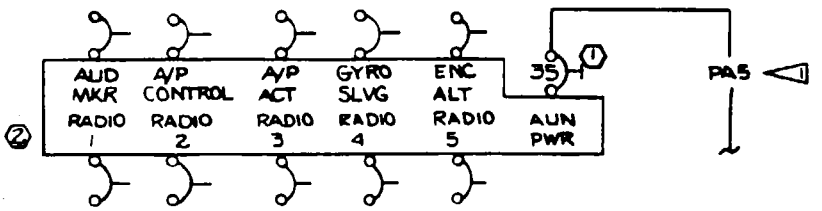

DETAIL A
EFF THRU SER (SR8982)

CONTRACT NO.			Cessna. AIRCRAFT CO.	PAWNEE DIVISION 5800 E. PAWNEE WICHITA, KANSAS
	NAME	DATE	TITLE	
DESIGN	SPENCER	2-27-79	CIRCUIT BREAKERS	
GROUP	D. Harden	3-5-79		
DRAWN	P MAYFIELD	2-19-79		
CHECK	YOUNGERS	2-20-79		
STRESS				
PROJ	J. H. MOORE	3-6-79	SIZE C	CODE IDENT NO 71379 / DWG NO. 2270001
APPD				
OTHER			SCALE NONE	(SR 8982) / PAGE 4 4.1

E	BY REV: ADD C611005-0102 (NOW SHOP PRACTICE) DELETE PA4(REF) ADD DETAIL B & PB 20, PB21, ORN(PB26) & PB27 (SR9632)	SEB RAO RCH 2-21-80	
F	BY REV: ADD PAGE 4.5.1 SER IN PB30 & PB31; SER OUT PB15 & PB16 R 82E0.030 (SR10099) (REF)	GLS 6/21/83	
	SEE PAGE 4.5.1 FOR CONTINUATION REV B		

15-00916

REVISION			
LET	DESCRIPTION	DATE	APPD
A	BY REV: S-1943-2 WAS S-1943-1 (SR8782)	RLY 4-10-78	
B	BY REV: ADD DETAIL A, PB19 & SER (SR9429)	SFU 11-2-78	
C	BY REV: S-1232-60 WAS S-1707-60 (SR9112)	PSM 2-20-79	
D	BY REV: 20GA WAS 22GA/PB11, PB12, PB18 16GA WAS 22GA/PB13 S-2099-8 WAS S-2099-6, S-1367-2-10 WAS S-1367-1-10 (NOW SHOP PRACTICE) YEL(PB15) WAS PB15, RED(PB11) WAS PB11, ORN(PB14) WAS PB14, BLU(PB13) WAS PB13 (USE EXISTING STOCK)	RLK HHG 9-5-79	

NOTES:

1. PART OF BASIC AVIONICS KIT

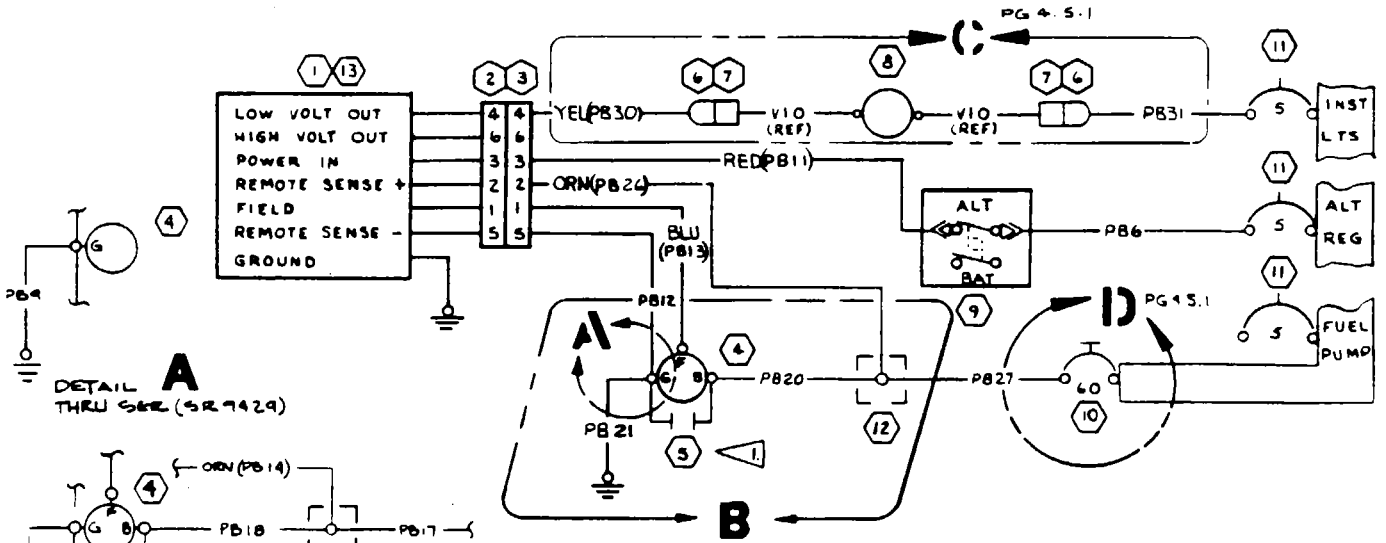

PB31	22			S-1367-1-6	S-1635-1		SER (SR10099) & ON
YEL(PB30)	20	-20-4		S-1635-1	S-2099-6		SER (SR10099) & ON
PB27	8	S-1562-8-9		S-1943-2	S-1367-4-12		SER (SR9632) & ON
ORN(PB26)	20	-20-3		S-2099-6	S-1367-1-12		SER (SR9632) & ON
PB21	8	S-1562-8-9		S-1943-1	S-1943-3		SER (SR9632) & ON
PB20	8	S-1562-8-9		S-1943-2	S-1943-1		SER (SR9632) & ON
PB19	8	S-1562-8-9		S-1943-2	S-1943-3		SER (SR9429) THRU SER (SR9632)
PB17	8	S-1562-8-9		S-1943-2	S-1367-4-8		THRU SER (SR9632)
PB16	22			S-1367-1-6	S-1635-1		THRU SER (SR10099)
YEL(PB15)	20	-20-4		S-1635-1	S-2099-6		THRU SER (SR10099)
ORN(PB14)	20	-20-3		S-2099-6	S-1367-1-12		THRU SER (SR9632)
BLU(PB13)	16	-16-6		S-2099-8	S-1367-2-10		
PB12	20			S-2099-6	S-1367-1-10		
RED(PB11)	20	-20-2		S-2099-6	S-1493-1		
PB18	8	S-1562-8-9		S-1943-2	S-1943-2		THRU SER (SR9632)
PB9	8	S-1562-8-9		S-1943-3	S-1367-4-12		THRU SER (SR9429)
PB6	22			S-1367-1-6	S-1493-1		
WIRE CODE NO	GA	MATERIAL	LG	TERMINALS			SERIALS

WIRE TABLE

13	C611005-0102	ALT CONTROL UNIT	(ALT)
12	0570314	TERMINAL BOARD	
11	S-1360-5L	CIRCUIT BREAKER	
10	S-1232-60	CIRCUIT BREAKER	
9	S-1994-1-1	MASTER SWITCH	
8	S-2135-2	LAMP ASSY	
7	S-1637-2	HOUSING	
6	S-1637-1	HOUSING	
5	S-1915-1	CAPACITOR	
4	C611503-0102	ALTERNATOR ASSY	
3	S-2373-2	CONNECTOR	
2	S-2373-1	CONNECTOR	
1	C611005-0101	ALT CONTROL UNIT	
ITEM NO	PART NO.	DESCRIPTION	

EQUIPMENT TABLE

CES-1000 IS APPLICABLE
VENDOR CODES PER S-1400
CES-XXXX-CESSNA SPEC. NO.
S-XXX OR CMXXXX-CESSNA STD. NO.

SUPERSEDES: 2270001 P 4.3

SUPERSEDED BY:

CONTRACT NO:

	NAME	DATE
DESIGN	SPENCER	2-21-78
GROUP	W. Hardin	3-1-78
DRAWN	SHAVER	2-15-78
CHECK	J. BLISS	2-16-78
STRESS		
PROJ	J. MOORE	3278
APPD		
OTHER		

Cessna AIRCRAFT CO.
PAWNEE DIVISION
5800 E. PAWNEE
WICHITA, KANSAS

TITLE
WIRING DIAGRAM — ALTERNATOR SYSTEM 60 AMP

SIZE	CODE IDENT NO.	DWG NO
C	71379	2270001

SCALE: NONE (SR8782) PAGE: 4.5

REVISION			
LET	DESCRIPTION	DATE	APPD
G	BY REV: ADD DETAIL "D" (SR 10415)	KWL 10-18-84	

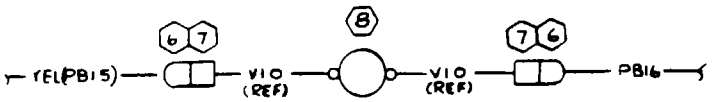

DETAIL C PG 4.5
(THRU SER (SR10099)

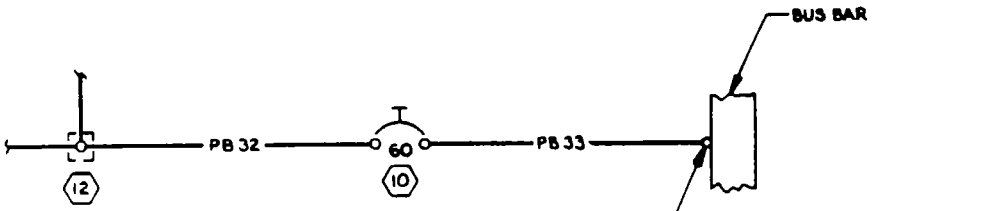

DETAIL D PG 4.5
APPLIES WHEN
STANDBY VACUUM PUMP
IS INSTALLED
SER (SR10415) & ON

15-00916

WIRE CODE NO	GA	MATERIAL	LG	TERMINALS			SERIALS
PB 33	8			S-1367-4-8	S-1367-4-10		SER (SR10415) & ON
PB 32	8			S-1943-2	S-1367-4-8		SER (SR10415) & ON

WIRE TABLE

TEM NO	PART NO.	DESCRIPTION
	EQUIPMENT TABLE	

CES-1000 IS APPLICABLE
VENDOR CODES PER S-1400
CES-XXXX=CESSNA SPEC. NO.
S-XXX OR CMXXXX=CESSNA STD. NO.

SUPERSEDES:

SUPERSEDED BY:

CONTRACT NO:

	NAME	DATE
DESIGN	G STAMM	6/21/83
GROUP	[illegible]	7-20-83
DRAWN	G STAMM	6/21/83
CHECK	R.E. Hart	6/22/83
STRESS		
PROJ	[illegible]	[illegible]
APPD	[illegible]	
OTHER		

Cessna AIRCRAFT CO.
PAWNEE DIVISION
5800 E. PAWNEE
WICHITA, KANSAS

TITLE
WIRING DIAGRAM —
ALTERNATOR SYSTEM
60 AMP

SIZE	CODE IDENT NO	DWG NO
C	71379	2270001

SCALE NONE (SR10099) PAGE: 4.5.1

REVISION			
LET	DESCRIPTION	DATE	APPD

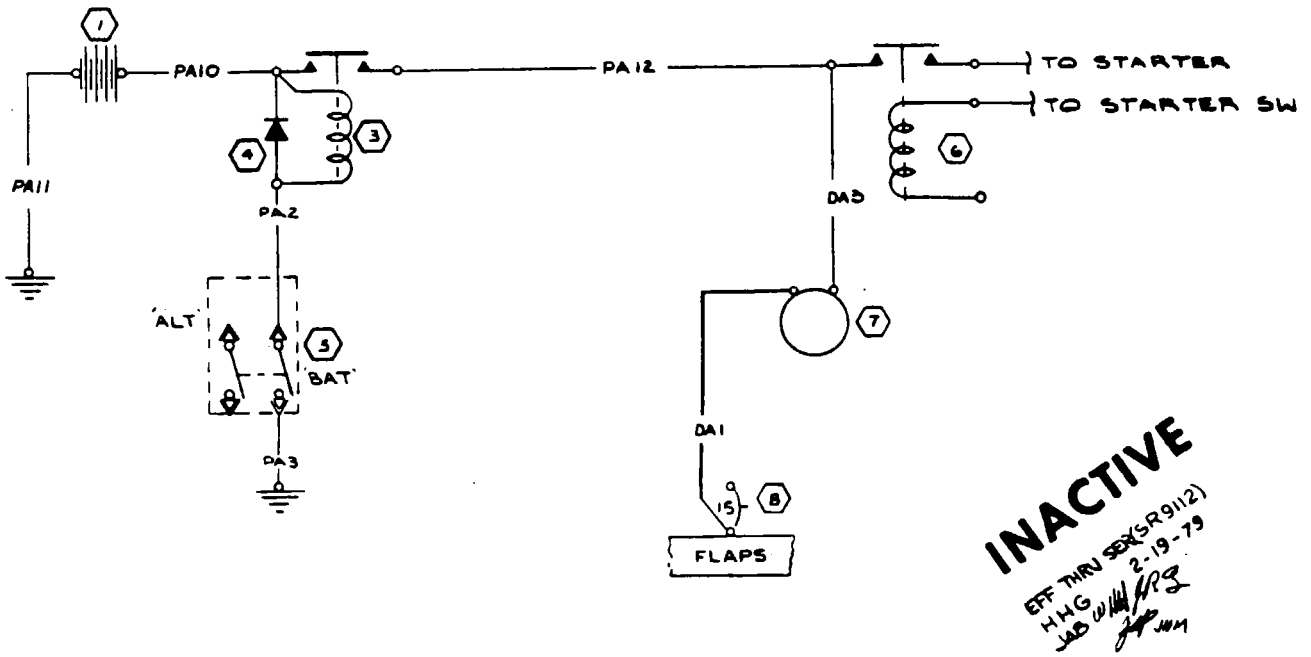

8	S-1360-15L	CKT BKR	
7	C669543	INST CLUSTER	
6	S-2443-1	STARTER CONTACTOR	
5	S-1994-1-1	SWITCH	
4	077072B	DIODE ASSY	
3	S-1580-1	BAT. CONTACTOR	
2			
1	C614002	BATTERY ASSY	
ITEM NO.	PART NO.	DESCRIPTION	

EQUIPMENT TABLE

CES-1000 IS APPLICABLE
VENDOR CODES PER S-1400
CES-XXXX-CESSNA SPEC. NO.
S-XXX OR CMXXXX-CESSNA
STD. NO.

SUPERSEDES: 2270001 P4.2

SUPERSEDED BY: 2270001 P4.9

WIRE CODE NO	GA	MATERIAL	LG	TERMINALS			SERIALS
PA11	4	S-1562-4-9		S-1367-4-13	S-1367-4-12		
PA10	4	S-1562-4-9		S-1367-6-13	S-1367-6-15		
PA12	4	S-1562-4-9		S-1367-6-13	S-2447-4		
PA3	22			S-1493-1	S-1367-1-8		
PA2	22			S-1367-1-10	S-1493-1		
DA3	8	S-1562-8-9		S-1367-4-10	S-2447-8		
DA1	8	S-1562-8-9		S-1367-4-10	S-1367-4-8		

WIRE TABLE

CONTRACT NO:

	NAME	DATE
DESIGN	WHITSELL	12-14-78
GROUP	W. Hardin	12-20-78
DRAWN	DD HAUN	12-11-78
CHECK	BORLESKE	12-12-78
STRESS		
PROJ	[illegible]	[illegible]
APPD	[illegible]	
OTHER		

Cessna AIRCRAFT CO.
PAWNEE DIVISION
5800 E. PAWNEE
WICHITA, KANSAS

TITLE: WIRING DIAGRAM — BATTERY CIRCUIT

SIZE	CODE IDENT. NO.	DWG NO
C	71379	2270001

SCALE NONE (SR 92.5) PAGE: 4.6

REVISION			
LET	DESCRIPTION	DATE	APPD

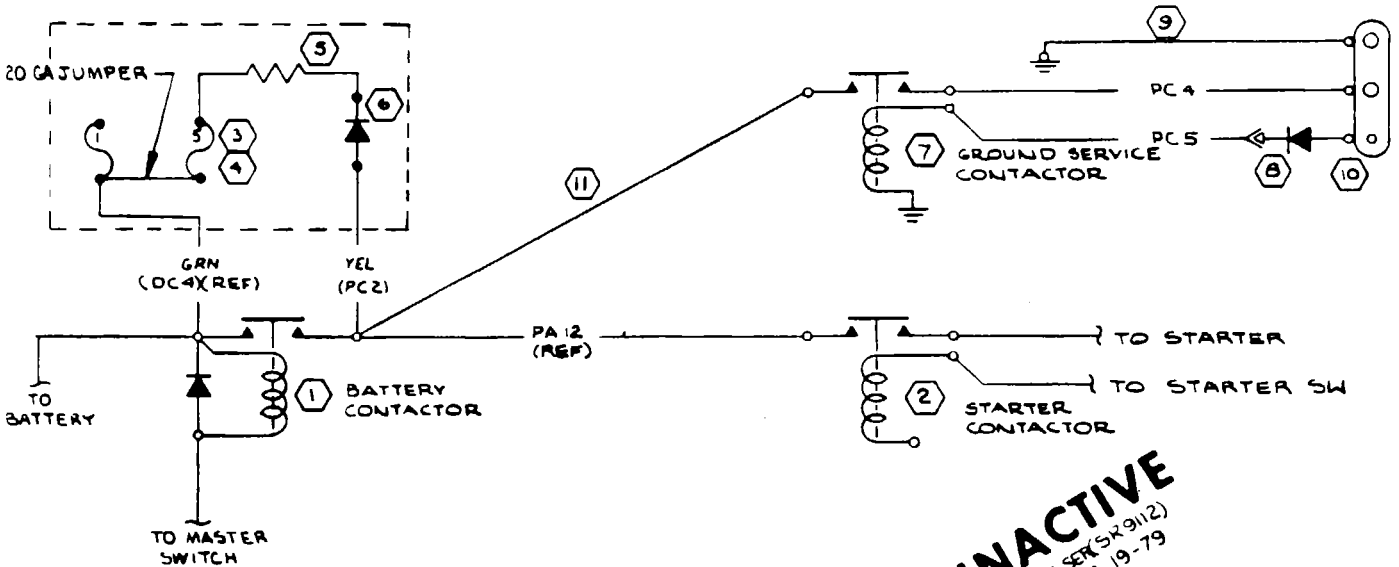

INACTIVE
EFF THRU SER (SR 9112)
HHG 2-19-79

11	1883112	BUS BAR ASSY	
10	MS-3506-1	RECEPTACLE	
9	0312155	GND STRAP	
8	1370045	DIODE BOARD ASSY	
7	S1577-1	CONTACTOR	
6	20H3P	DIODE	
5	X-26263	.75 Ω RESISTOR	
4	S-1090-2	FUSE HOLDER	
3	S-1091-5	FUSE	
2	S-2443-1	CONTACTOR	
1	S-1580-1	CONTACTOR	
ITEM NO.	PART NO.	DESCRIPTION	

EQUIPMENT TABLE

WIRE CODE NO	GA	MATERIAL	LG	TERMINALS			SERIALS
PC 5	22			S-1367-1-10	S-1493-1		
PC 4	4	S-1362-4-9		S-1367-6-14	S-1367-6-13		
YEL (PC2)	22	-22-9		SOLDER	S-1367-1-13		

WIRE TABLE

CES-1000 IS APPLICABLE
VENDOR CODES PER S-1400
CES-XXXX=CESSNA SPEC. NO.
S-XXX OR CMXXXX=CESSNA STD. NO.

SUPERSEDES: 2270001 P4.1
SUPERSEDED BY: 2270001 P4.10

CONTRACT NO:

	NAME	DATE
DESIGN	WHITSON	12-14-78
GROUP	W. H. Hudson	12-20-78
DRAWN	DD HAUN	12-11-78
CHECK	BORLESKE	12-12-78
STRESS		
PROJ	[illegible]	[illegible]
APPD	[illegible]	
OTHER		

Cessna AIRCRAFT CO.
PAWNEE DIVISION
5800 E. PAWNEE
WICHITA, KANSAS

TITLE
WIRING DIAGRAM—
GROUND SERVICE RECEPTACLE
(OPT)

SIZE	CODE IDENT NO.	DWG NO
C	71379	2270001

SCALE: NONE (SR 9215) PAGE: 4.7

NOTES:

1. INSTALL S-1071-3-18.0 TUBING OVER PA5 & PA18 WIRE BEFORE INSTALLING TERMINALS.
2. S-1360-15L CIRCUIT BREAKER REQUIRED WITH 2 BLADED PROP. S-1360-20L CIRCUIT BREAKER REQUIRED WITH 3 BLADED PROP

REVISION			
LET	DESCRIPTION	DATE	APPD
A	BY REV: ADD DETAIL "A", "B", "C", PA19, S-1232-5, S-2326-1, 2270019, 2270020 & SER (SR9632)	RAO 3-11-80	
B	BY REV: ADD NOTE 2 (SR9632)	GLS 5/15/80	
C	BY REV: ADD PA18, DELETE PA19 (SR9632)(REF) ADD DETAIL "A" & S1232-35 (SR10122)	MKT 10-31-80 GW 2-13-81	
D	BY REV: ADD S-1232-2 CKT BKR; 2 AMP CKT BKR WAS 5 AMP CKT BKR FOR ELECTRIC TRIM (SR9632)(REF)	GLS 6-3-81	

INACTIVE
THRU SER (SR 10099)
REV 1-15-82

91600-44

15	S-1232-2	CIRCUIT BREAKER	
14	S-2326-1	CIRCUIT BREAKER	
13	2270020	BUS BAR	
12	S-1232-5	CIRCUIT BREAKER	
11	2270019	BUS BAR	
10	2270014	BUS BAR	
9	S-1360-20L	CIRCUIT BREAKER	
8	S-1232-35	CIRCUIT BREAKER	
7	S-1360-15L	CIRCUIT BREAKER	
6	S-1360-10L	CIRCUIT BREAKER	
5	S-1360-5L	CIRCUIT BREAKER	
4	S-1232-60	CIRCUIT BREAKER	
3	S-1232-30	CIRCUIT BREAKER	
2	1270831	BUS BAR	
1	S-2281-1	SWITCH	
ITEM NO	PART NO	DESCRIPTION	

EQUIPMENT TABLE

WIRE CODE NO	GA	MATERIAL	LG	TERMINALS			SERIALS
PA18	8	S-1562-8-9		S-1367-4-8	S-1367-4-10	1	SER (SR9632) & ON
PA9	12			S-1367-3-8	S-1367-3-6		THRU SER (SR9632)
PA5	10	S-1562-10-9		S-1367-3-8	S-1367-3-8	1	THRU SER (SR9632)
PA4	8	S-1562-8-9		S-1367-4-8	S-1367-4-8		THRU SER (SR9632)

WIRE TABLE

CES-1000 IS APPLICABLE
VENDOR CODES PER S-1400
CES-XXXX=CESSNA SPEC NO
S-XXX OR CMXXXX=CESSNA
STD. NO.

SUPERSEDES PG 44

SUPERSEDED BY PG 4130 & 4131

CONTRACT NO.

	NAME	DATE
DESIGN	SPENCER	2-27-79
GROUP		3-5-79
DRAWN	PMAYFIELD	2-19-79
CHECK	YOUNGERS	2-20-79
STRESS		
PROJ	J.H. MOORE	3-6-79
APPD		
OTHER		

Cessna AIRCRAFT CO.
PAWNEE DIVISION
5800 E. PAWNEE
WICHITA, KANSAS

TITLE
WIRING DIAGRAM — CIRCUIT BREAKERS

SIZE C | CODE IDENT NO. 71379 | DWG NO 2270001

SCALE NONE | (SR9112) | PAGE 4.8.0.

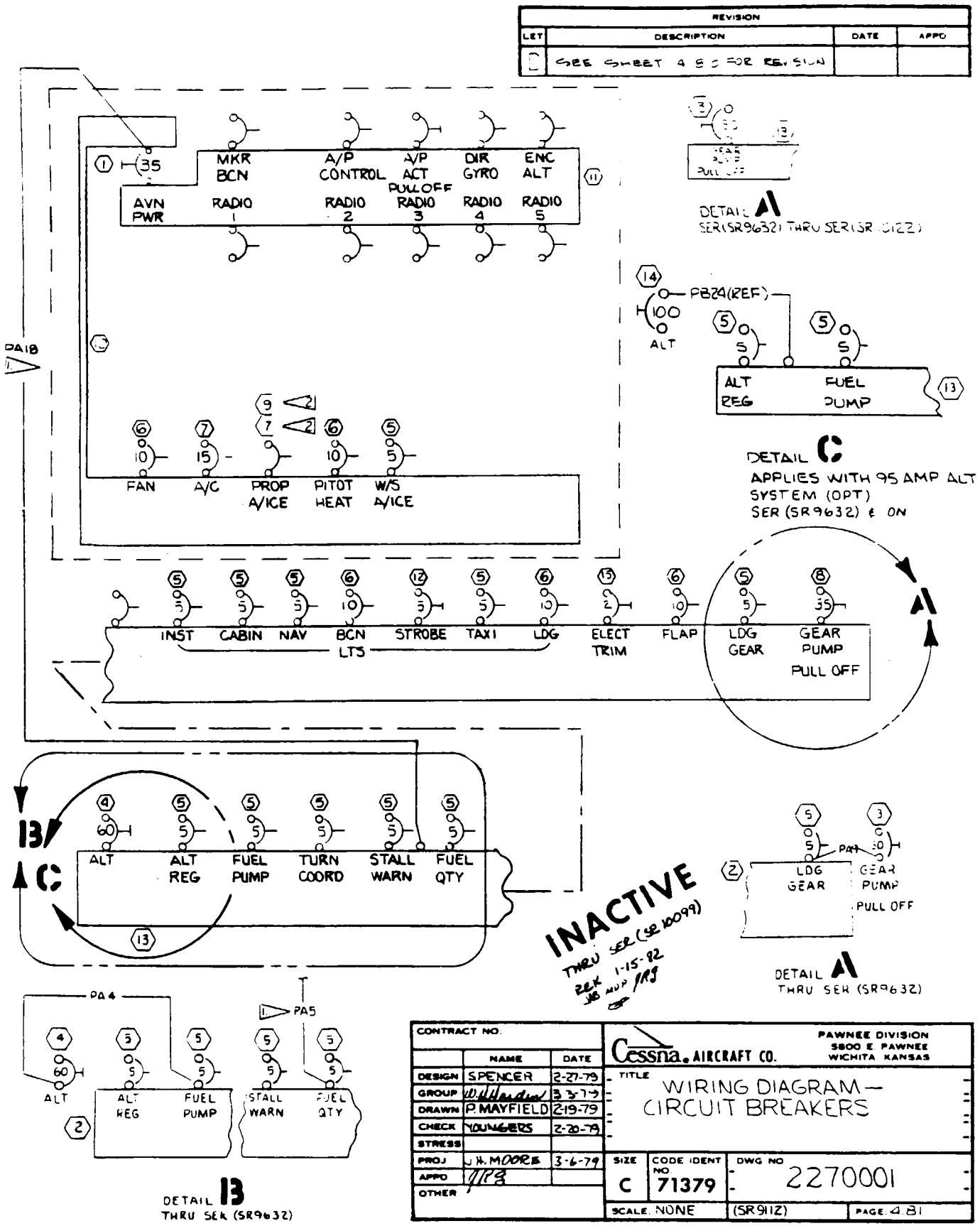
REVISION
LET
DESCRIPTION
DATE
APPD
SEE SHEET 4 5 0 FOR REVISION
MKR BCN
A/P CONTROL
A/P ACT PULL OFF
DIR GYRO
ENC ALT
AVN PWR
RADIO 1
RADIO 2
RADIO 3
RADIO 4
RADIO 5
DETAIL A
SER (SR9632) THRU SER (SR 0122)
PB24 (REF)
ALT
ALT REG
FUEL PUMP
DETAIL C
APPLIES WITH 95 AMP ALT SYSTEM (OPT)
SER (SR9632) & ON
PA18
FAN
A/C
PROP A/ICE
PITOT HEAT
W/S A/ICE
INST
CABIN
NAV
BCN LTS
STROBE
TAXI
LDG
ELECT TRIM
FLAP
LDG GEAR
GEAR PUMP PULL OFF
ALT
ALT REG
FUEL PUMP
TURN COORD
STALL WARN
FUEL QTY
INACTIVE
THRU SER (SR 10099)
DETAIL A
THRU SER (SR9632)
PA4
PA5
DETAIL B
THRU SER (SR9632)
CONTRACT NO.
NAME
DATE
DESIGN SPENCER 2-27-79
GROUP
DRAWN P. MAYFIELD 2-19-79
CHECK YOUNGERS 2-20-79
STRESS
PROJ J. H. MOORE 3-6-79
APPD
OTHER
Cessna AIRCRAFT CO.
PAWNEE DIVISION
5800 E. PAWNEE
WICHITA KANSAS
TITLE
WIRING DIAGRAM — CIRCUIT BREAKERS
SIZE C
CODE IDENT NO 71379
DWG NO 2270001
SCALE NONE
(SR911Z)
PAGE 4.81

D	BY REV: ADD DETAIL 'B' (SR10152)	GW 5-1-81	
E	BY REV: S-2443-2 WAS S-2443-1; S-2475-2 WAS S-2475-1 (SR10213	REK 8-31-81	

REVISION			
LET	DESCRIPTION	DATE	APPD
A	BY REV: S2447-4 WAS S-1367-6-13/PA14 & PA15 (MER R182 E0779)	NTL 3-2-79	
B	BY REV: ADD S-2475-1 (SR 9112)	HHG 6-18-79	
C	BY REV: PC11 (REF) WAS PC7 (REF) & PA19 (REF) ADD DETAIL "A", DA5, HC4 (REF) (SR9632)	NTL RAO 3-14-80	

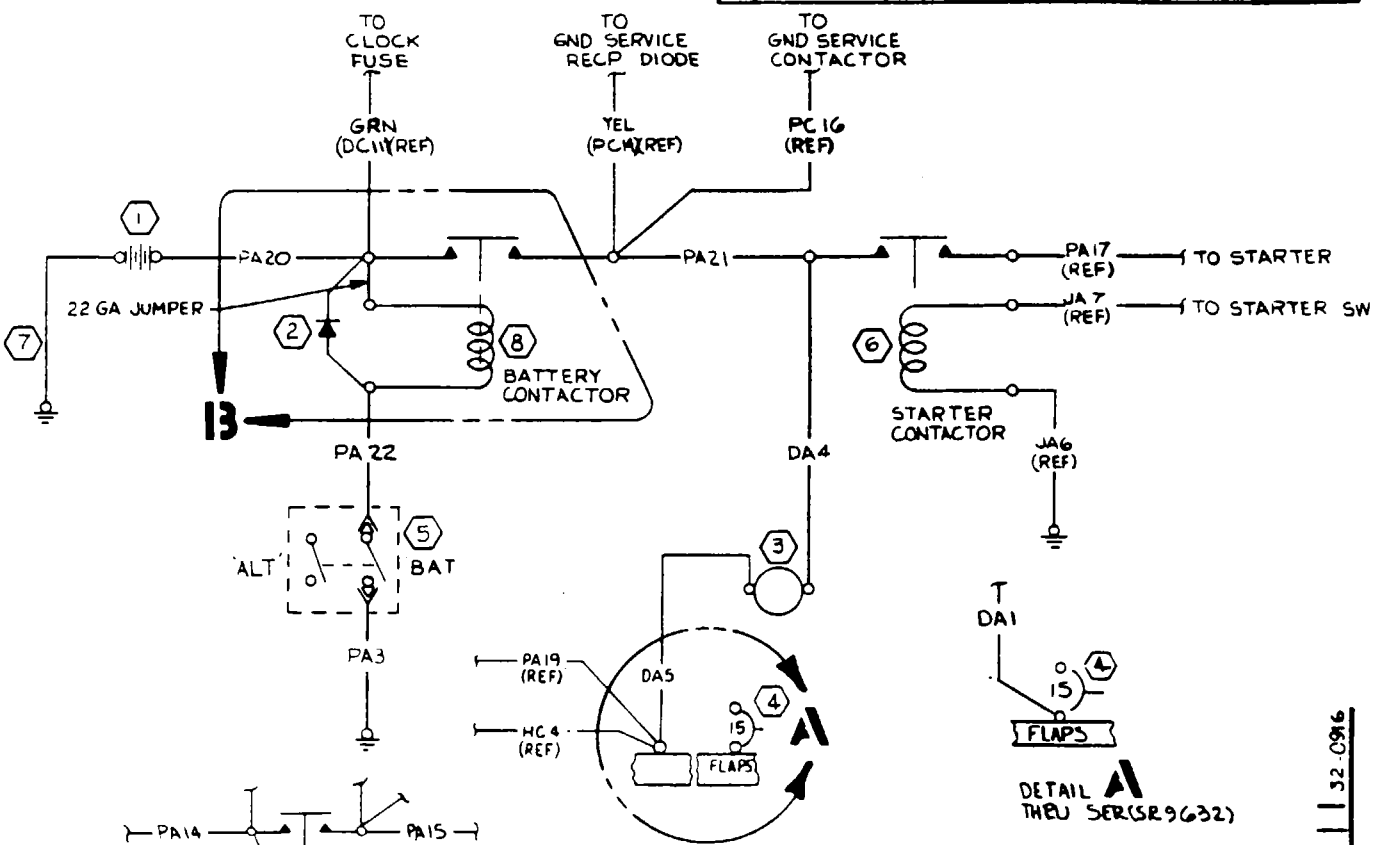

WIRE CODE NO	GA	MATERIAL	LG	TERMINALS			SERIALS
PA22	22			S1367-1-10	S1493-1		SER(SR10152) & ON
PA21	4	S-1562-4-9		S1367-6-13	S2447-4		SER(SR10152) & ON
PA20	4	S-1562-4-9	15	S2447-4	S2447-4		SER(SR10152) & ON
DA5	8	S-1562-8-9		S-1367-4-10	S-1367-4-10		SER (SR9632) & ON
DA4	8	S-1562-8-9		S2447-4	S1367-6-13		
DA1	8	S-1562-8-9		S-1367-4-10	S-1367-4-8		THRU SER (SR9632)
PA16	22			S-1367-1-10	S-1493-1		THRU SER (SR10152)
PA15	4	S-1562-4-9		S-2447-4	S2447-4		THRU SER (SR10152)
PA14	4	S-1562-4-9		S-2447-4	S-1367-6-13		THRU SER (SR10152)
PA3	22			S-1493-1	S-1367-1-8		

WIRE TABLE

	PART NO.	DESCRIPTION
8	S-2475-2	CONTACTOR
7	C412007	GND STRAP
6	S-2443-2	CONTACTOR
5	S-1494-1-1	SWITCH
4	S-1360-15L	CKT BKR
3	C669545	NST CLUSTER
2	C770728	DIODE ASSY
1	C614002-0101	BATTERY ASSY

EQUIPMENT TABLE

CES-1000 IS APPLICABLE
VENDOR CODES PER S-1400
CES-XXXX=CESSNA SPEC. NO
S-XXX OR CMXXXX=CESSNA STD. NO.

SUPERSEDES: 2270001 P 4.6

SUPERSEDED BY:

CONTRACT NO:

	NAME	DATE
DESIGN	SPENCER	2-27-79
GROUP	D. Wheeler	2-24-79
DRAWN	H. GHAZARIAN	2-19-79
CHECK	BORLESKE	2-20-79
STRESS		
PROJ	J.H. MOORE	3-6-79
APPD	JRB	
OTHER		

Cessna AIRCRAFT CO.
PAWNEE DIVISION
5800 E. PAWNEE
WICHITA, KANSAS

TITLE
WIRING DIAGRAM — BATTERY CIRCUIT

SIZE	CODE IDENT NO	DWG NO
C	71379	2270001

SCALE: NONE (SR 9112 PAGE: 6.9

REVISION			
LET	DESCRIPTION	DATE	APPD
A	BY REV: S2447-4 S2447-4 WAS S-2447-4 S1367-6-13/PC7: S1367-6-14 S2447-4 WAS S1367-6-14. S1367-6-13/PC8 (MER R182 E0779)	NTL 5-2-79	
B	BY REV: ADD S-2475-1 (SR9112)	HHG 6-18-79	

INACTIVE (THRU SER (SR9632)) NTL 2-25-80

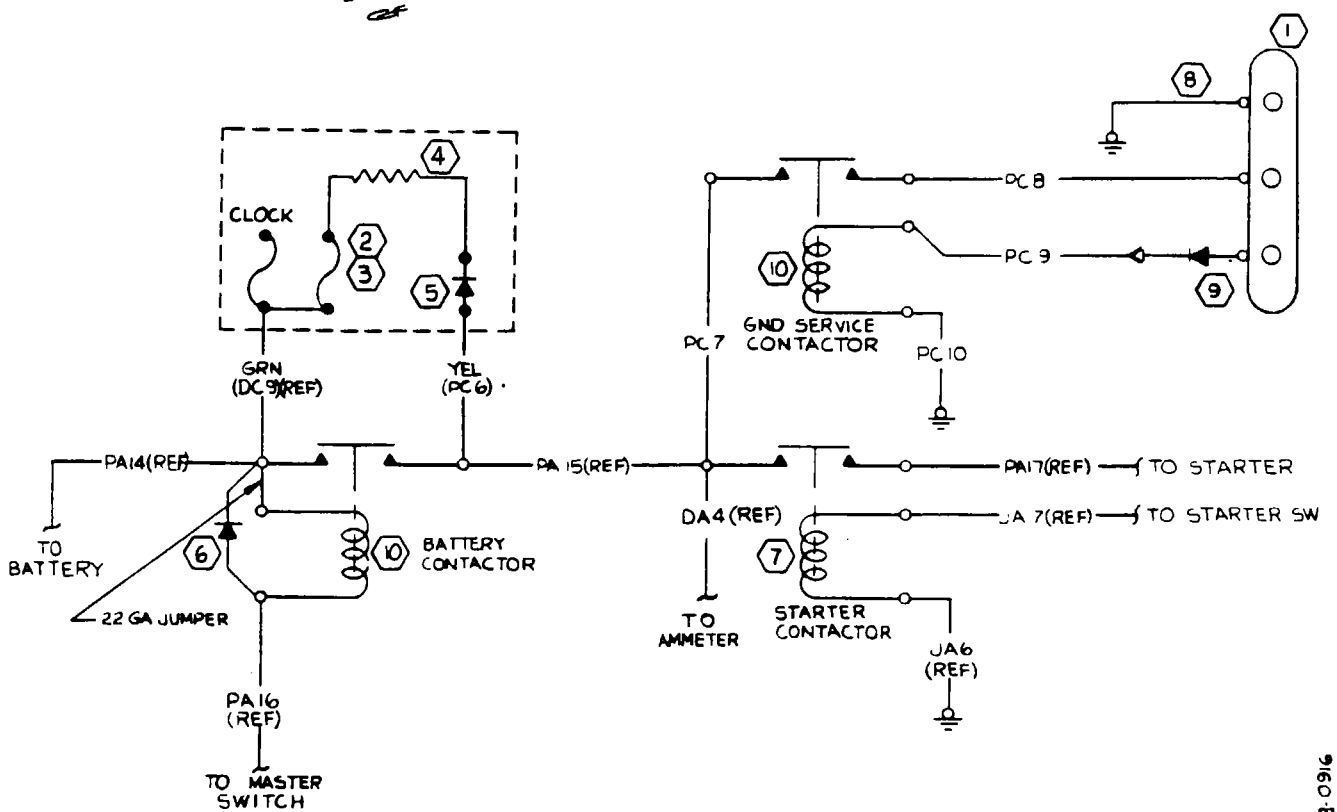

32-0916

PC10	22			S-1367-1-10	S-1367-1-10		
PC9	22			S-1367-1-10	S-1493-1		
PC8	4	S-1562-4-9		S-1367-6-14	S2447-4		
PC7	4	S-1562-4-9		S-2447-4	S2447-4		
YEL(PC6)	22	-22-4		SOLDER	S-1367-1-13		
WIRE CODE NO	GA	MATERIAL	LG	TERMINALS			SERIALS

WIRE TABLE

10	S-2475-1	CONTACTOR	
9	1570043	DIODE BOARD ASSY	
8	0312155	GND STRAP	
7	S-2443-1	CONTACTOR	
6	0770728	DIODE ASSY	
5	20H3P	DIODE	
4	X-26263	.75 Ω RESISTOR	
3	S-1090-2	FUSE HOLDER	
2	S-1091-5	FUSE	
1	MS3506-1	RECEPTACLE	
ITEM NO.	PART NO.	DESCRIPTION	

EQUIPMENT TABLE

CES-1000 IS APPLICABLE
VENDOR CODES PER S-1400
CES-XXXX-CESSNA SPEC. NO.
S-XXX OR CMXXXX-CESSNA STD. NO.

SUPERSEDES: 2270001 P 4.7
SUPERSEDED BY: 2270001 P 4.11

CONTRACT NO:

	NAME	DATE
DESIGN	SPENCER	2-27-79
GROUP		2-24-79
DRAWN	H.GHAZARIAN	2-19-79
CHECK	BORLESKE	2-20-79
STRESS		
PROJ	J.H.MOORE	3-6-79
APPD		
OTHER		

Cessna AIRCRAFT CO.
PAWNEE DIVISION
5800 E. PAWNEE
WICHITA KANSAS

TITLE
WIRING DIAGRAM — GROUND SERVICE RECEPTACLE (OPT)

SIZE C | CODE IDENT. NO. 71379 | DWG NO 2270001

SCALE: NONE | (SR 3112) | PAGE: 4.10

REVISION			
LET	DESCRIPTION	DATE	APPD
A	BY REV: PC12 WAS PC8, PC13 WAS PC9 MER 182 E0871 (SR9632) (REF)	GLS 8/15/80	
B	BY REV: PC14 WAS PC6, PC16 WAS PC11, PC17 WAS PC12, PC18 WAS PC13, (SR10152)	GW 5-1-81	
C	BY REV: S-2443-2 WAS S-2443-1; S-2475-2 WAS S-2475-1 (SR10213)	RLK 8-31-81	

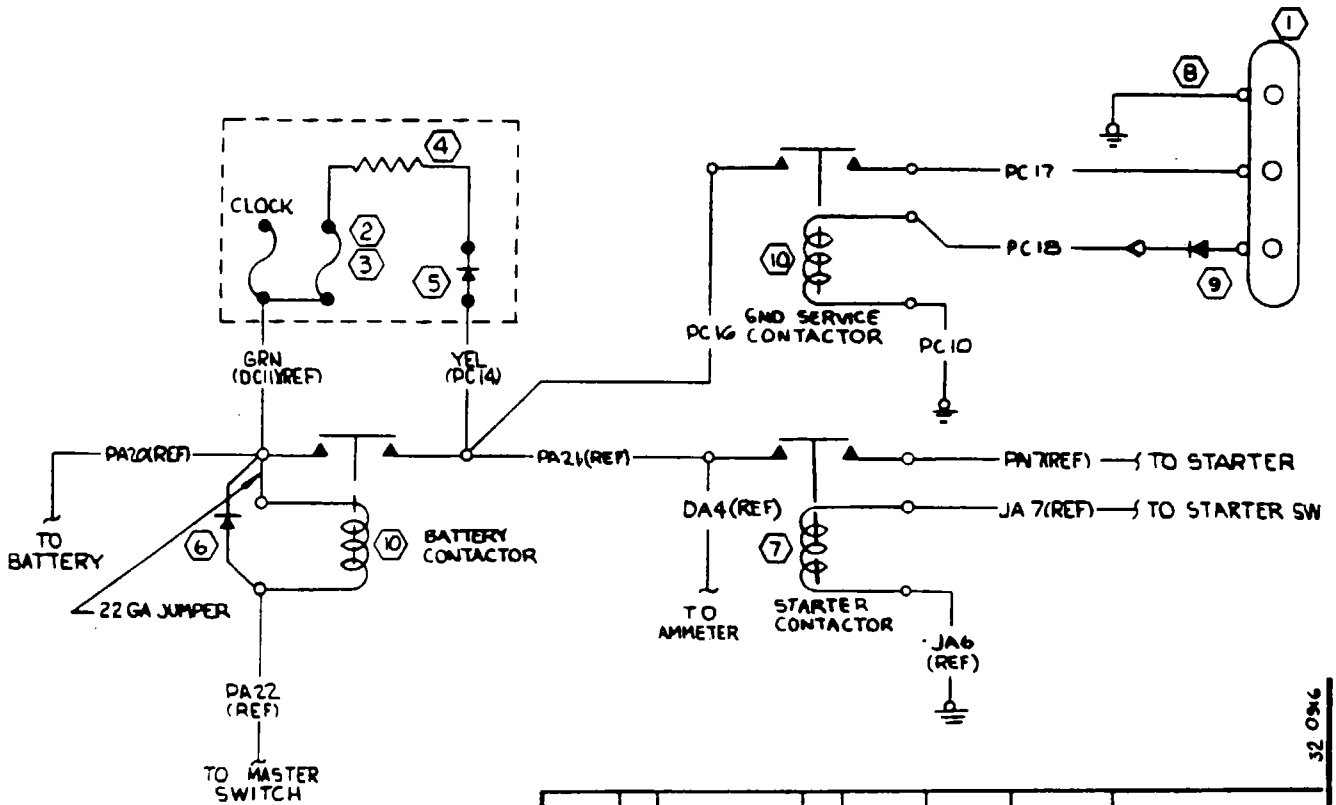

PC18	22		10	S1367-1-10	S1493-1		SER(SR10152) & ON
PC17	4	S1562-4-9	9	S1367-6-14	S2447-4		SER(SR10152) & ON
PC16	4	S-1562-4-9	67	S1367-6-13	S2447-4		SER(SR10152) & ON
YEL(PC14)	22	-22-4	11	SOLDER	S-1367-1-13		SER(SR10152) & ON
PC10	22			S-1367-1-10	S-1367-1-10		
PC13	22			S-1367-1-10	S-1493-1		THRU SER(SR10152)
PC12	4	S-1562-4-9		S-1367-6-14	S2447-4		THRU SER(SR10152)
PC11	4	S-1562-4-9		S-2447-4	S2447-4		THRU SER(SR10152)
YEL(PC6)	22	-22-4		SOLDER	S-1367-1-13		THRU SER(SR10152)
WIRE CODE NO	GA	MATERIAL	LG	TERMINALS			SERIALS

WIRE TABLE

ITEM NO	PART NO.	DESCRIPTION
10	S-2475-2	CONTACTOR
9	1570043	DIODE BOARD ASSY
8	0553010	GND STRAP
7	S-2443-2	CONTACTOR
6	0770728	DIODE ASSY
5	20H3P	DIODE
4	X-26263	.75 Ω RESISTOR
3	S-1090-2	FUSE HOLDER
2	S-1091-5	FUSE
1	MS3506-1	RECEPTACLE

EQUIPMENT TABLE

CES-1000 IS APPLICABLE
VENDOR CODES PER S-1400
CES-XXXX=CESSNA SPEC. NO.
S-XXX OR CMXXXX=CESSNA STD. NO.

SUPERSEDES: 2270001 P 4.10
SUPERSEDED BY:

CONTRACT NO:

	NAME	DATE
DESIGN	G STAMM	3-5-80
GROUP	W. Hunter	3-6-80
DRAWN	LANCASTER	2-25-80
CHECK	BORLESKE	2-25-80
STRESS		
PROJ	GFICKEL	3-18-80
APPD		
OTHER		

Cessna AIRCRAFT CO.
PAWNEE DIVISION
5800 E. PAWNEE
WICHITA, KANSAS

TITLE
WIRING DIAGRAM — GROUND SERVICE RECEPTACLE (OPT)

SIZE C | CODE IDENT. NO. 71379 | DWG NO 2270001

SCALE: NONE | (SR9632) | PAGE: 4.11

NOTES:

1. TERMINATE VENDOR FURNISHED WIRES WITH S-1636-1 PIN
2. PART OF BASIC AVIONICS KIT, INSTALLED WITH FIRST RADIO

REVISION			
LET	DESCRIPTION	DATE	APPD
A	BY REV: YEL(PB30)(REF) WAS YEL(PB15) (REF), PB31 (REF) WAS PB16 (REF) R182E01030 (SR10099) (REF)	GLS 6/21/83	

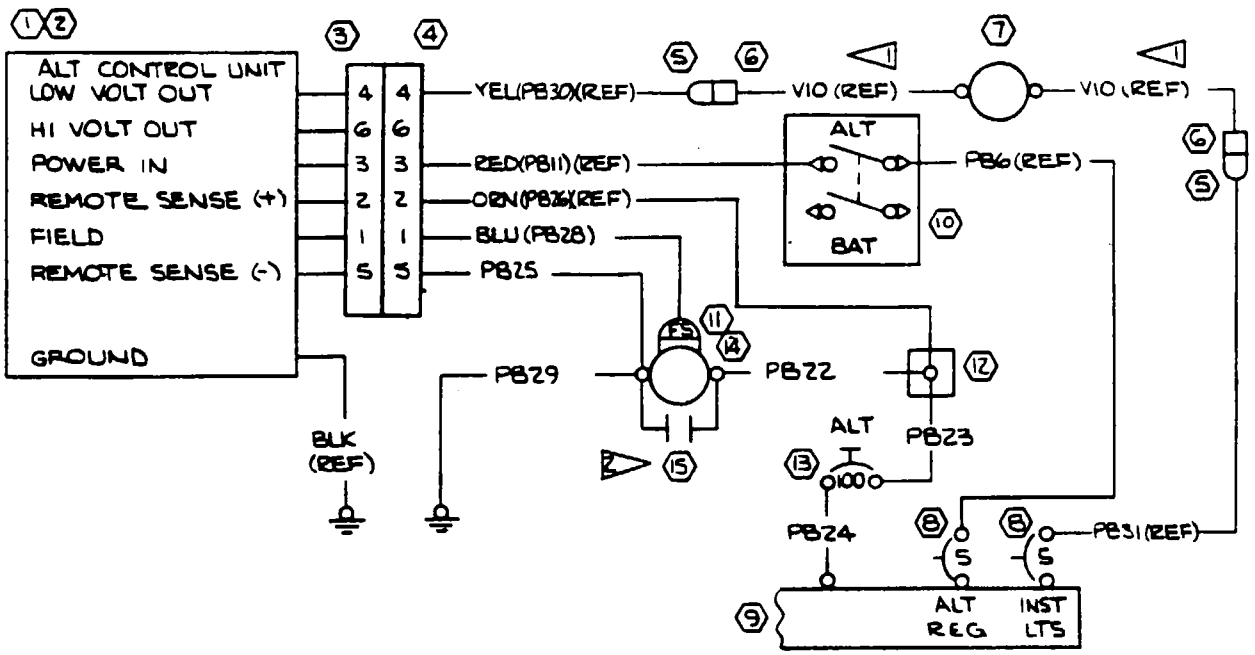

15	S-1915-1	CAPACITOR						
14	C611005-0101	ALT ASSY						
13	S-2326-1	CIRCUIT BREAKER	PB25	20			S-2099-6	S-1367-1-10
12	0570315	TERMINAL BLOCK	PB24	4	S-1562-4-9		S-2402-2	S-2402-1
11	D208-14489-KA	CONNECTOR	PB23	4	S-1562-4-9		S-2402-2	S-1367-6-12
10	S-1994-1-1	MASTER SWITCH	PB22	4	S-1562-4-9		S-2402-2	S-2402-2
9	2270020	BUS BAR	PB29	4	S-1562-4-9		S-2402-2	S-2402-1
8	S-1360-5L	CIRCUIT BREAKER	(PB28)	18	-18-6		S-2099-8	S-2376-1
7	S-2135-2	LAMP ASSY	WIRE CODE NO	GA	MATERIAL	LG	TERMINALS	SERIALS
6	S-1637-2	HOUSING						
5	S-1637-1	HOUSING						
4	S-2373-2	CONNECTOR						
3	S-2373-1	CONNECTOR						
2	C611005-0102	ALT CONTROL UNIT						
1	C611005-0101	ALT CONTROL UNIT						
WIRE NO	PART NO.	DESCRIPTION						

EQUIPMENT TABLE

WIRE TABLE

CES-1000 IS APPLICABLE
VENDOR CODES PER S-1400
CES-XXXX-CESSNA SPEC. NO.
S-XXX OR CNXXXX-CESSNA STD. NO.

SUPERSEDES:

SUPERSEDED BY:

CONTRACT NO:

	NAME	DATE
DESIGN	G STAMM	3-12-80
GROUP		3-13-80
DRAWN	R. YOUNGERS	3-11-80
CHECK	R.E HAIR	3-11-80
STRESS		
PROJ	G FICKEL	3-17-80
APPD		
OTHER		

Cessna AIRCRAFT CO.
PAWNEE DIVISION
5800 E. PAWNEE
WICHITA, KANSAS

TITLE
WIRING DIAGRAM — ALTERNATOR SYSTEM, 95 AMP (OPT)

SIZE	CODE IDENT NO.	DWG NO
C	71379	2270001

SCALE: NONE (SR9632) PAGE: 4.12

NOTES:

1. INSTALL S-1071-3-180 TUBING OVER PA26 WIRE BEFORE INSTALLING TERMINALS.
2. S-1360-15L CIRCUIT BREAKER REQUIRED WITH 2 BLADED PROP. S-1360-20L CIRCUIT BREAKER REQUIRED WITH 3 BLADED PROP.
3. WIRE NEEDED ONLY WHEN 2270014 BUS BAR INSTALLED.

REVISION			
LET	DESCRIPTION	DATE	APPD
A	BY REV: ADD NOTE 3 (SR10099)	REK 4-12-82	
B	BY REV: DELETE PA25; ADD RED(REF) SR10099)	GW 7-2-82	

ITEM NO	PART NO.	DESCRIPTION
17	S-2582-1	FUSE
16	S-2582-1	FUSEHOLDER
15	S-1232-10	CIRCUIT BREAKER
14	S-2326-1	CIRCUIT BREAKER
13	2270020	BUS BAR
12	S-1232-5	CIRCUIT BREAKER
11	2270019	BUS BAR
10	2270014	BUS BAR
9	S-1232	CIRCUIT BREAKER
8	S-1360-20L	CIRCUIT BREAKER
7	S-1360-15L	CIRCUIT BREAKER
6	S-1360-10L	CIRCUIT BREAKER
5	S-1360-5L	CIRCUIT BREAKER
4	S-1232-60	CIRCUIT BREAKER
3	S-1232-35	CIRCUIT BREAKER
2	2270020	BUS BAR
1	S-2281-1	SWITCH

EQUIPMENT TABLE

WIRE CODE NO	GA	MATERIAL	LG	TERMINALS			SERIALS
PA24	8	S-1562-8-9		S-1367-4-8	S-1367-4-6		
PA23	8	S-1562-8-9		S-1367-4-8	S-1367-4-6		
PA26	8	S-1562-8-9		S-1367-4-8	S-1367-4-8	(STD)	

WIRE TABLE

CES-1000 IS APPLICABLE
VENDOR CODES PER S-1400
CES-XXXX=CESSNA SPEC. NO.
S-XXX OR CMXXXX=CESSNA STD. NO.

SUPERSEDES: PG 4.80 & 4.8.1

SUPERSEDED BY:

CONTRACT NO:

	NAME	DATE
DESIGN	KLEIN	10-21-81
GROUP	M PAINE	1-20-82
DRAWN	KLEIN	10-21-81
CHECK	BORLESKE	1-22-82
STRESS		
PROJ		1-21-82
APPD		
OTHER		

Cessna. AIRCRAFT CO.
PAWNEE DIVISION
5800 E. PAWNEE
WICHITA, KANSAS

TITLE: WIRING DIAGRAM — CIRCUIT BREAKERS

SIZE	CODE IDENT. NO	DWG NO
C	71379	2270001

SCALE: NONE (SR10099) PAGE: 4.13.0

99-0080

REVISION			
LET	DESCRIPTION	DATE	APPD
B	SEE SHEET 14.3 O FOR REVISION		

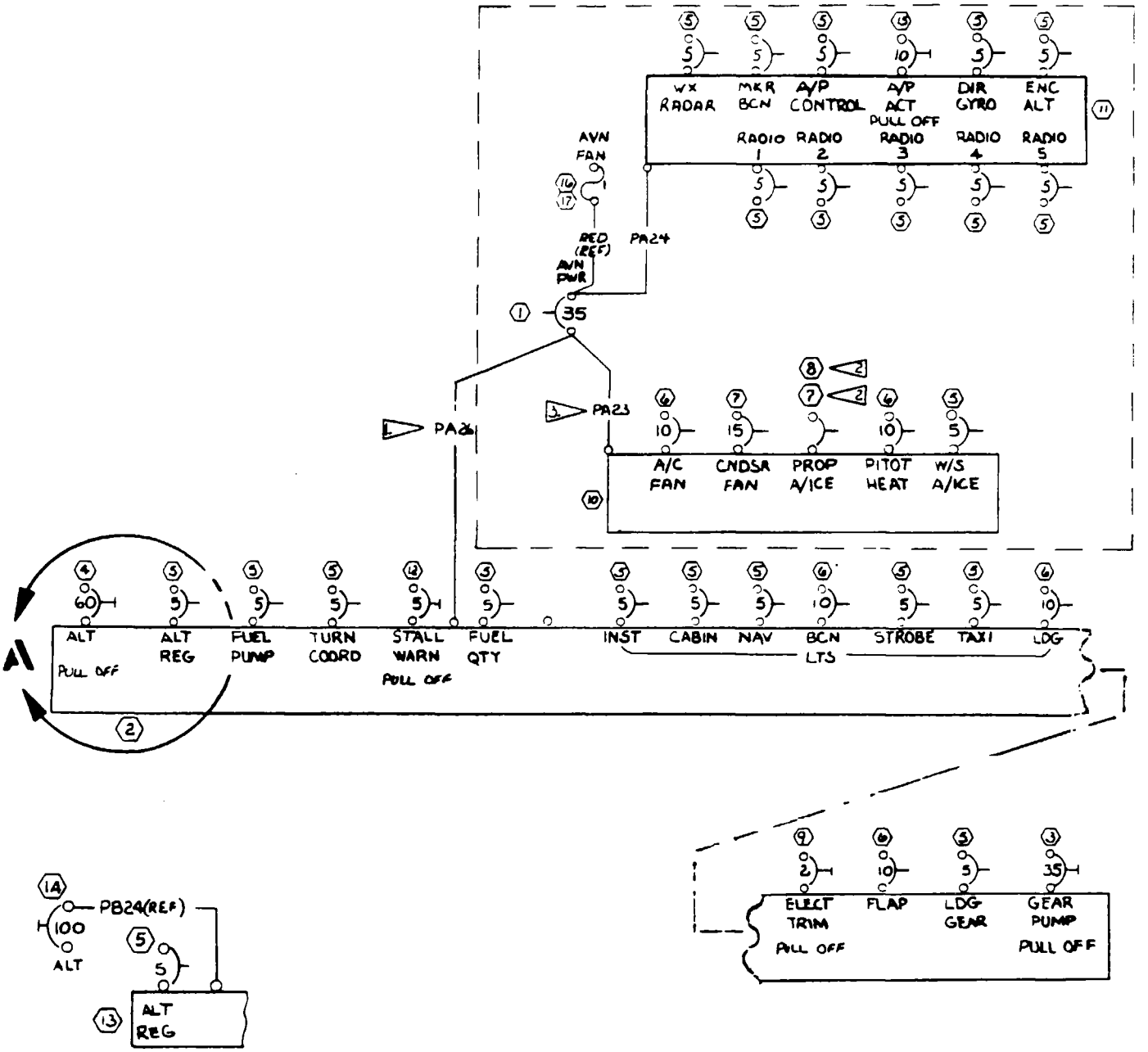

DETAIL A
APPLIES WITH 95 AMP ALT SYSTEM (OPT)

CONTRACT NO		
	NAME	DATE
DESIGN	KLEIN	10-21-81
GROUP	M. PRINE	1-20-82
DRAWN	KLEIN	10-21-81
CHECK	BORLESKE	1-18-82
STRESS		
PROJ		1-21-82
APPD		
OTHER		

Cessna. AIRCRAFT CO.
PAWNEE DIVISION
5800 E. PAWNEE
WICHITA, KANSAS

TITLE: WIRING DIAGRAM — CIRCUIT BREAKERS

SIZE	CODE IDENT NO.	DWG NO
C	71379	2270001

SCALE NONE (SR10099) PAGE 4.13.1

REVISION			
LET	DESCRIPTION	DATE	APPD
A	BY REV: NOTE 2 WAS "S-1367-1-10 & S-1367-3-10", ADD DETAIL A (SR8462)	DLP 10-18-77	
B	BY REV: JA7(REF) WAS JA5(REF) (SR 9112)	HHG 2-19-79	

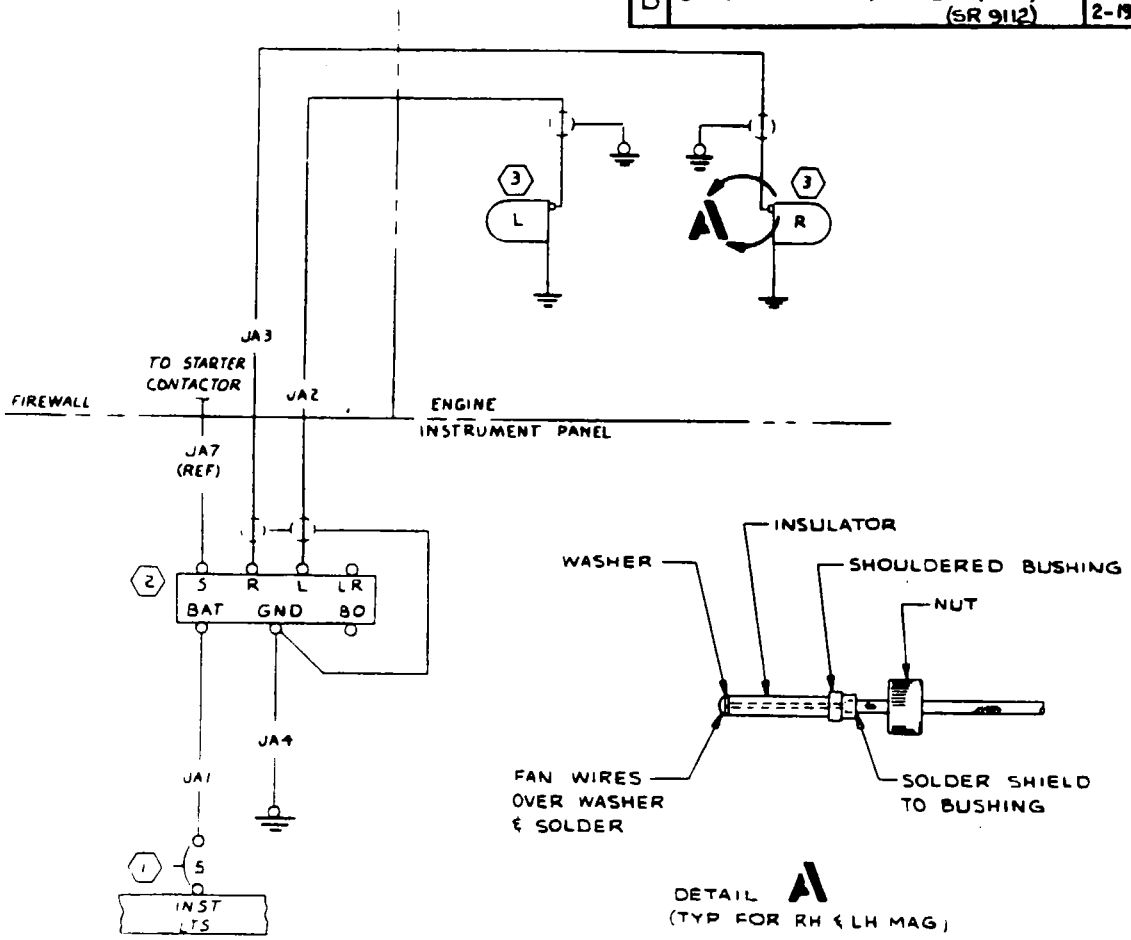

12-0916

NOTES:

1. S-1367-1-6 FOR CENTER CONDUCTOR
   S-1367-2-6 FOR SHIELDING
2. TERMINALS SUPPLIED WITH ENGINE

WIRE CODE NO	GA	MATERIAL	LG	TERMINALS			SERIALS
JA4	20		10	S-1367-1-6	S-1367-1-8		
JA3	18S		55	1	2		
JA2	18S		55	1	2		
JA1	20		11	S-1367-1-6	S-1367-1-6		

WIRE TABLE

ITEM NO	PART NO.	DESCRIPTION	
3	D6LN-2031	MAGNETO	
2	C292501-0105	IGNITION SWITCH	
1	S-360-5L	CIRCUIT BREAKER	

EQUIPMENT TABLE

CES-1000 IS APPLICABLE
VENDOR CODES PER S-1400
CES-XXXX=CESSNA SPEC. NO.
S-XXX OR CMXXXX=CESSNA STD. NO.

SUPERSEDES.

SUPERSEDED BY.

CONTRACT NO:

	NAME	DATE
DESIGN	SPENCER	3-28-77
GROUP	W H Hunter	4-13-77
DRAWN	SCHIFFELBEIN	3-16-77
CHECK	J YOUEL	3-18-77
STRESS		
PROJ	J H MOORE	4-4-77
APPD	JRS	
OTHER		

Cessna AIRCRAFT CO.
PAWNEE DIVISION
5800 E. PAWNEE
WICHITA, KANSAS

TITLE
WIRING DIAGRAM — IGNITION SYSTEM

SIZE	CODE IDENT. NO.	DWG NO
C	71379	2270001

SCALE: NONE (SR8462) PAGE: 5.1

Ignition System (Sheet 1 of 2)

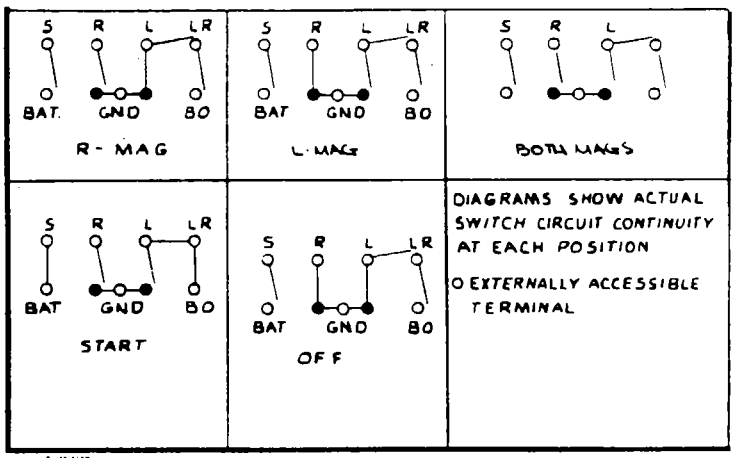

CONTRACT NO:			Cessna AIRCRAFT CO. PAWNEE DIVISION 5800 E. PAWNEE WICHITA, KANSAS
	NAME	DATE	TITLE WIRING DIAGRAM — IGNITION SYSTEM
DESIGN	SPENCER	3-28-77	
GROUP	W.J. Hundem	4-13-77	
DRAWN	SCHIFFELBEIN	3-16-77	
CHECK	J. Youel	3-18-77	
STRESS			
PROJ	J.H. MOORE	4-4-77	SIZE C / CODE IDENT. NO. 71379 / DWG NO 2270001
APPD	JRS		
OTHER			SCALE: NONE / (SR8462) / PAGE: 5.1

Ignition System (Sheet 2 of 2)

REVISION			
LET	DESCRIPTION	DATE	APPD
A	BY REV PA8 (REF) WAS 1553112; ADD DAZ (REF); S-1367-6-13 / PA6 WAS S-1367-6-14 (SR8462)(REF)	DLP 10-18-77	JAS ARS

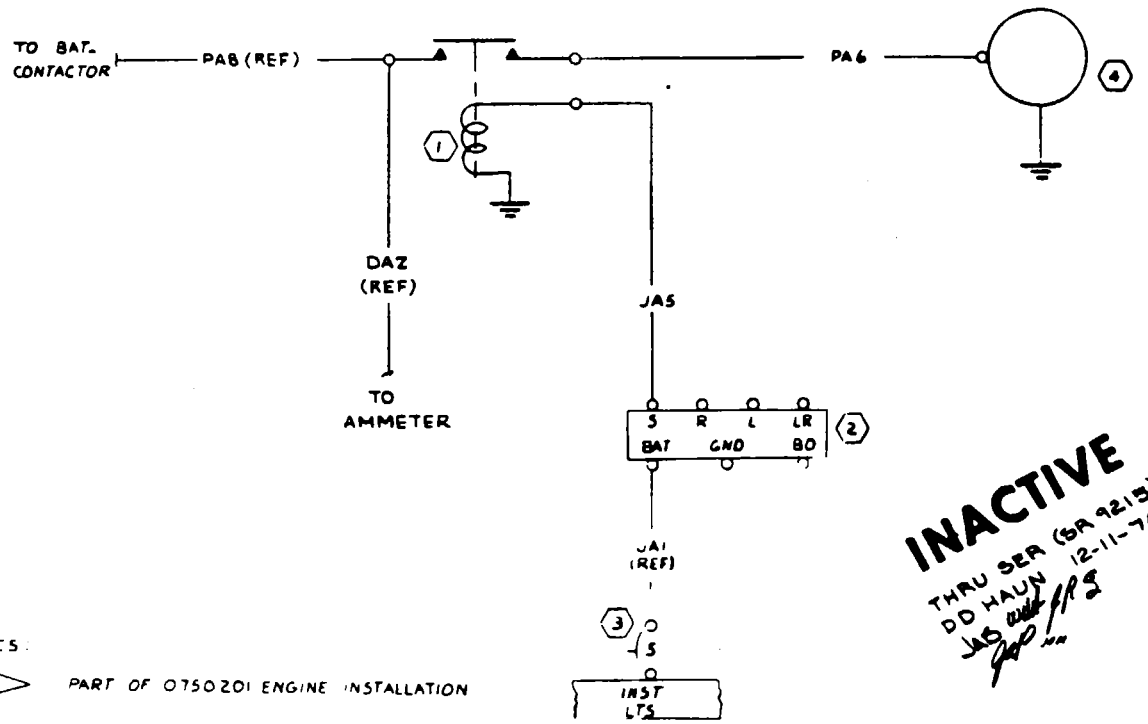

NOTES:

1. PART OF 0750201 ENGINE INSTALLATION

WIRE CODE NO	GA	MATERIAL	LG	TERMINALS			SERIALS
PA6	4	S-1562-4-9	92	S1367-613	S1367-613		
JA5	22		86	S1367-116	S1367-110		

WIRE TABLE

ITEM NO	PART NO.	DESCRIPTION
4	1.	STARTER
3	S-1360-5L	CIRCUIT BREAKER
2	C292501-0105	IGNITION SWITCH
1	S-1577-1	STARTER CONTACTOR

EQUIPMENT TABLE

CES-1000 IS APPLICABLE
VENDOR CODES PER S-1400
CES-XXXX-CESSNA SPEC. NO.
S-XXX OR CMXXXX-CESSNA STD. NO.

SUPERSEDES

SUPERSEDED BY. 2270001 P6.2

CONTRACT NO:

	NAME	DATE
DESIGN	SPENCER	3-28-77
GROUP	W J Hayden	4-13-77
DRAWN	SCHIFFELBEIN	3-16-77
CHECK	J. Youel	3-18-77
STRESS		
PROJ	J.L. MOORE	4-14-77
APPD	ARS	
OTHER		

Cessna AIRCRAFT CO. PAWNEE DIVISION 5800 E. PAWNEE WICHITA, KANSAS

TITLE WIRING DIAGRAM — STARTER SYSTEM

SIZE C | CODE IDENT. NO. 71379 | DWG NO 2270001

SCALE: NONE | (SR8462) | PAGE: 6.1

REVISION			
LET	DESCRIPTION	DATE	APPD
A	BY REV: ADD DETAIL A (SR 9112)	HHG 2-19-79	
B	BY REV: S-2443-2 WAS S-2443-1 (SR 10213)	REK 8-21-81	

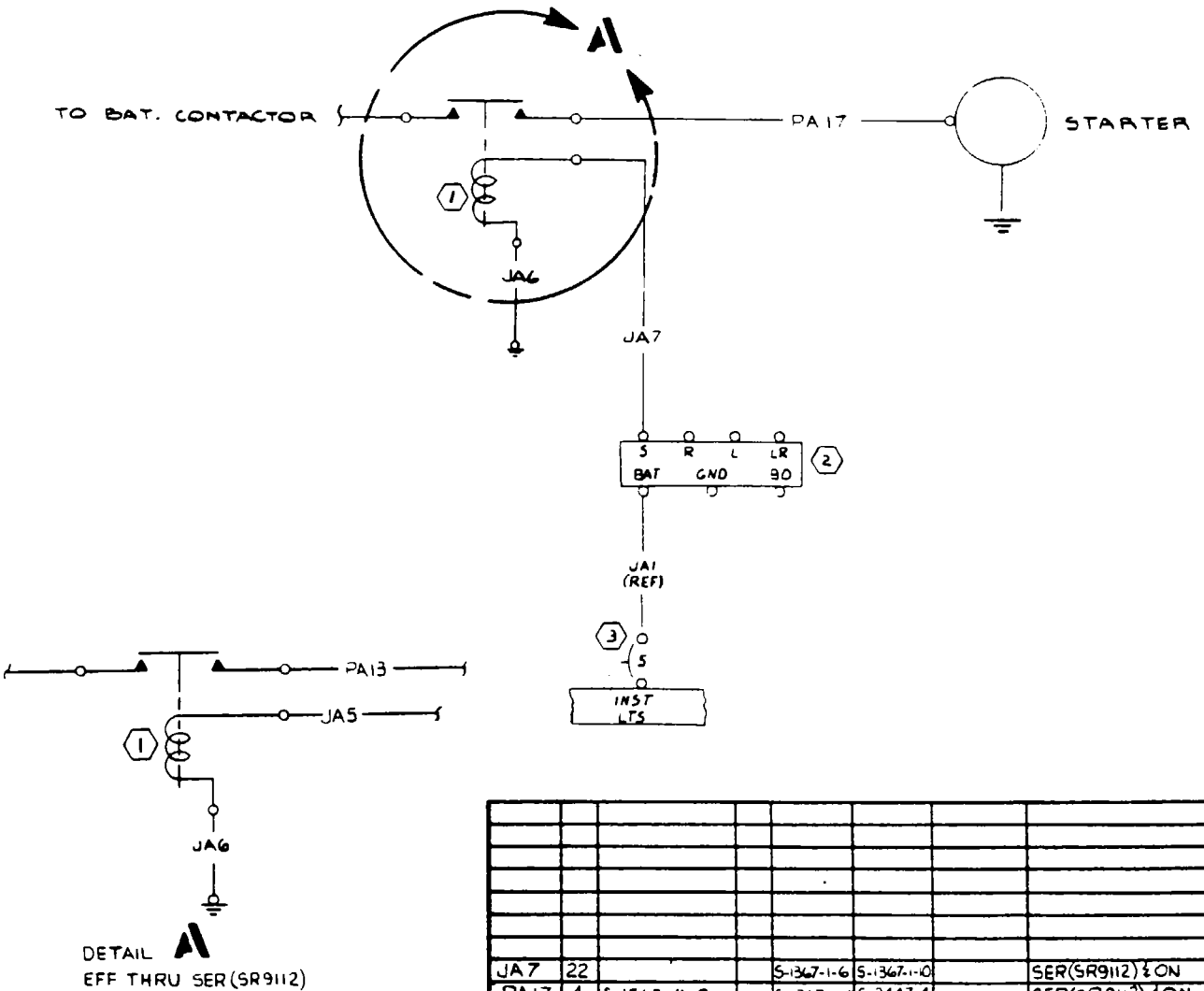

WIRE CODE NO	GA	MATERIAL	LG	TERMINALS			SERIALS
JA7	22			S-1367-1-6	S-1367-1-10		SER(SR9112) & ON
PA17	4	S-1562-4-9		S-1367-6-13	S 2447-4		SER(SR9112) & ON
JA6	22			S-1367-1-10	S-1367-1-10		
PA13	4	S-1562-4-9		S-1367-6-13	S-2447-4		THRU SER(SR9112)
JA5	22			S-1367-1-6	S-1367-1-10		THRU SER(SR9112)

WIRE TABLE

ITEM NO	PART NO.	DESCRIPTION
3	S-1360-5L	CIRCUIT BREAKER
2	C292501	IGNITION SWITCH
1	S-2443-2	STARTER CONTACTOR

EQUIPMENT TABLE

CES-1000 IS APPLICABLE
VENDOR CODES PER S-1400
CES-XXXX=CESSNA SPEC. NO.
S-XXX OR CMXXXX=CESSNA STD. NO.

SUPERSEDES: 2270001 P 6.1

SUPERSEDED BY:

CONTRACT NO:

	NAME	DATE
DESIGN	WHITSON	12-14-78
GROUP		12-20-78
DRAWN	DD HAUN	12-9-78
CHECK	BORLESKE	12-12-78
STRESS		
PROJ	L. MOORE	12-18
APPD		
OTHER		

Cessna AIRCRAFT CO.
PAWNEE DIVISION
5800 E. PAWNEE
WICHITA, KANSAS

TITLE
WIRING DIAGRAM — STARTER SYSTEM

SIZE C | CODE IDENT. NO. 71379 | DWG NO 2270001

SCALE: NONE | (SR 9215) | PAGE: 0.2

REVISION			
LET	DESCRIPTION	DATE	APPD
A	BY REV: ADD FLAGNOTE 2, DETAIL A & C291504-0201 (SR8782)	CMK 7-13-78	
B	BY REV: C291504 WAS C291504-0201, C291506 WAS C291506-0101 (SR 9799)	MKM 9-25-80	

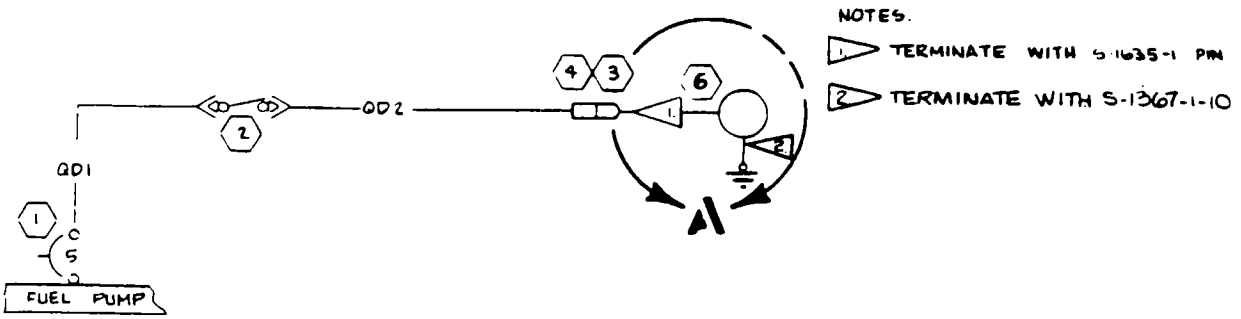

WIRE CODE NO	GA	MATERIAL	LG	TERMINALS		SERIALS
QD 2	22			S 1493 1	S-1635-1	
QD 1	22			S-1367-1-10	S 1493-1	

WIRE TABLE

ITEM NO	PART NO.	DESCRIPTION
6	C291504	FUEL PUMP
5	C291506	FUEL PUMP
4	S-1637 2	HOUSING
3	S 1637 1	HOUSING
2	S 2160 1	SWITCH
1	S 1360 5L	CIRCUIT BREAKER

EQUIPMENT TABLE

CES-1000 IS APPLICABLE
VENDOR CODES PER S-1400
CES XXXX-CESSNA SPEC. NO.
S-XXX OR CMXXXX-CESSNA STD. NO

SUPERSEDES:

SUPERSEDED BY:

CONTRACT NO:

	NAME	DATE
DESIGN	SPENCER	3-28-77
GROUP		
DRAWN	HARVEY	3-16-77
CHECK	J YOUEL	3-18-77
STRESS		
PROJ		
APPD		
OTHER		

Cessna AIRCRAFT CO.
PAWNEE DIVISION
5800 E. PAWNEE
WICHITA, KANSAS

TITLE
WIRING DIAGRAM — FUEL PUMP

SIZE	CODE IDENT NO.	DWG NO
C	71379	2270001

SCALE: NONE | (SR 8[illegible]) | PAGE: 1 1

REVISION			
LET	DESCRIPTION	DATE	APPD

NOTES:

1. TERMINATE WITH S-1635-1 PIN
2. TERMINATE WITH S-1367-1-8

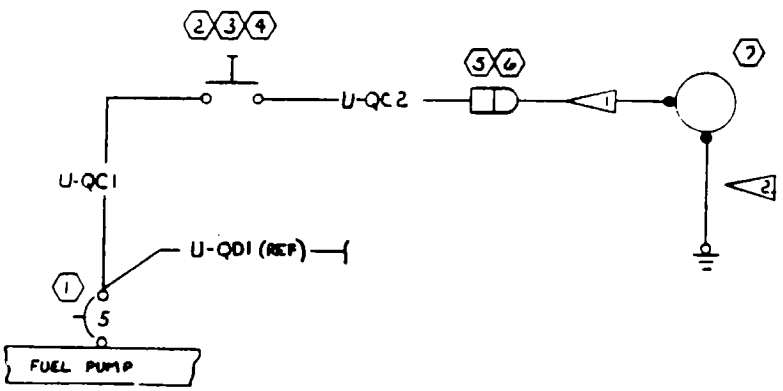

99-00916

WIRE CODE NO	GA	MATERIAL	LG	TERMINALS			SERIALS
U-QC2	22			SOLDER	S-1636-1		
U-QC1	22			S-1367-1-6	SOLDER		

WIRE TABLE

ITEM NO.	PART NO.	DESCRIPTION	
7	B2DX62	VALVE	
6	S-1637-1	HOUSING	
5	S-1637-2	HOUSING	
4	S-2592-3	GUARD	
3	S-2592-2	ADAPTER	
2	S-2592-1	SWITCH	
1	S-1360-5L	CIRCUIT BREAKER	

EQUIPMENT TABLE

CES-1000 IS APPLICABLE
VENDOR CODES PER S-1400
CES-XXXX-CESSNA SPEC. NO.
S-XXX OR CMXXXX-CESSNA
STD. NO.

SUPERSEDES:

SUPERSEDED BY:

CONTRACT NO:

	NAME	DATE
DESIGN	R. KLEIN	1-5-82
GROUP	M PAINE	1-8-82
DRAWN	R. KLEIN	1-5-82
CHECK	R E Hauer	1-8-82
STRESS		
PROJ	J R Sandford	1-9-82
APPD		
OTHER		

Cessna. AIRCRAFT CO.
PAWNEE DIVISION
5800 E. PAWNEE
WICHITA, KANSAS

TITLE
WIRING DIAGRAM —
ELECTRIC PRIMER-TR182

SIZE	CODE IDENT. NO.	DWG NO
C	71379	2270001

SCALE: NONE (SR10099) PAGE: 2 2

REVISION			
LET	DESCRIPTION	DATE	APPD
A	BY REV: DELETE NOTE 2 & S-1637-4; S-1367-1-4 WAS S-1636-5 (SR8462)	CM 4-25-77	
B	BY REV: DELETE 0713602 INACTIVATE DWG (SR8462)(REF)	DLP 10-18-77	

NOTES:

1. MATERIAL IS ALPHA 5857-7 (VENDOR CODE 92194) OR BELDEN 83009-1 (VENDOR CODE 70903)

2. ~~CRIMP S-1636-5 TERMINAL AROUND WIRE INSULATION SEND .25 OF STRIPPED WIRE BACK OVER CRIMP & SOLDER PER CES 1000. USE MOLEX NO. 1321 CRIMPING TOOL ONLY.~~

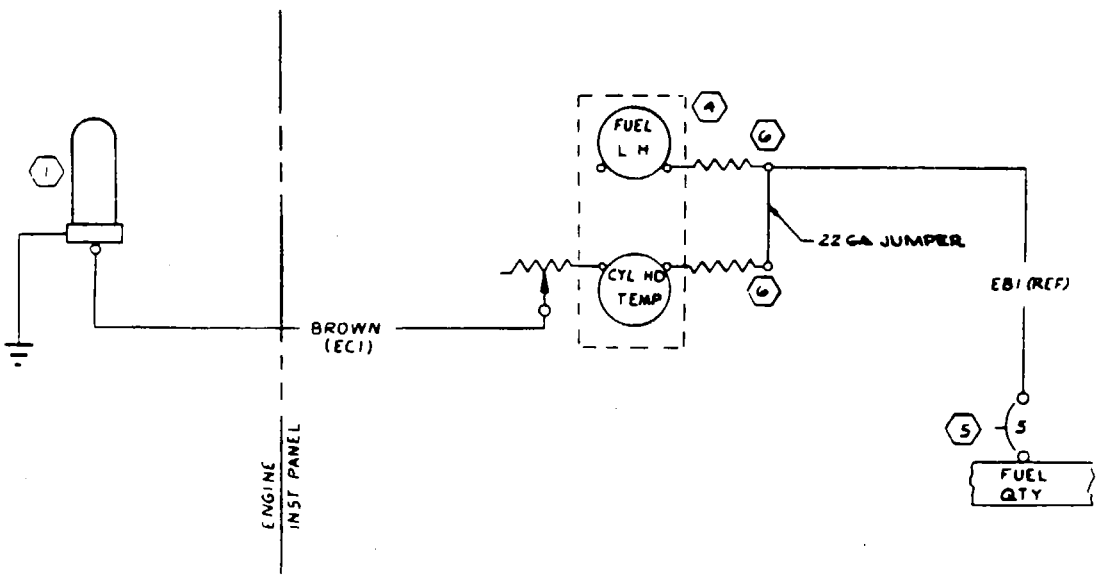

INACTIVE THRU SER SR 8782) CS 2-15-78 JB

WIRE CODE NO	GA	MATERIAL	LG	TERMINALS		SERIALS
BRN (EC1)	18	1		S-1367-1-8	S-1367-1-4	

WIRE TABLE

ITEM NO	PART NO.	DESCRIPTION
6	819210	RESISTOR ASSY
5	S-1360-5L	CIRCUIT BREAKER
4	C669502-0211	INST CLUSTER
1	S-1372-1	SENDING UNIT-CYL HD TEMP

EQUIPMENT TABLE

CES-1000 IS APPLICABLE
VENDOR CODES PER S-1400
CES-XXXX-CESSNA SPEC. NO.
S-XXX OR CMXXXX-CESSNA
STD. NO.

SUPERSEDES:

SUPERSEDED BY: 2270001 PG. 8.5

CONTRACT NO:

	NAME	DATE
DESIGN	SPENCER	3-28-77
GROUP	D.A. Hamilton	4-13-77
DRAWN	SCHIFFELBEIN	8-16-77
CHECK	J. YOUEL	3-18-77
STRESS		
PROJ	J. MOORE	4-14-77
APPD	TPC	
OTHER		

Cessna AIRCRAFT CO. PAWNEE DIVISION 5800 E PAWNEE WICHITA, KANSAS

TITLE WIRING DIAGRAM — CYLINDER HEAD TEMPERATURE

SIZE C | CODE IDENT. NO. 71379 | DWG NO 2270001

SCALE NONE | (SR 8462) | PAGE: 8.1

REVISION			
LET	DESCRIPTION	DATE	APPD
A	BY REV: S-1367-1-6 WAS S-1367-1-8, S-1367-1-10 WAS S-1367-1-8/EB1 (NOW SHOP PRACTICE) R182E0655 DWG BECOMES INAC (SR8782)	CRS 2-15-78	JJB

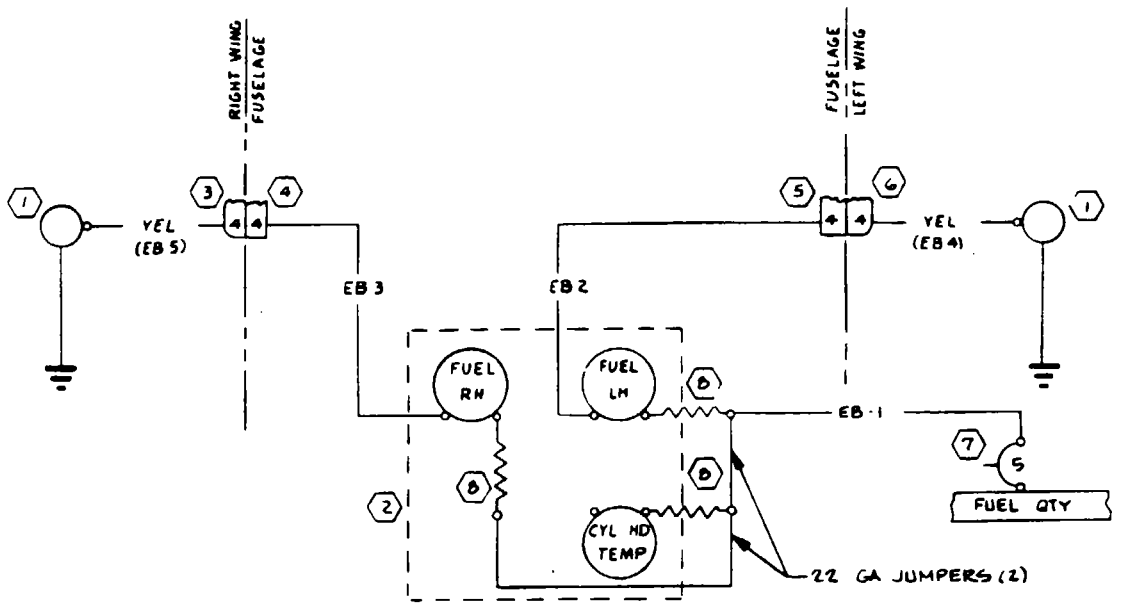

INACTIVE THRU SER (SR8782) CRS 2-15-78 JJB

WIRE CODE NO	GA	MATERIAL	LG	TERMINALS			SERIALS
YEL (EB4)	22	-22-4		S-1367-1-10	S-1635-1		
YEL (EB5)	22	-22-4		S-1367-1-10	S-1635-1		
EB 3	22			S-1367-1-10	S-1636-1		
EB 2	22			S-1367-1-10	S-1636-1		
EB 1	22			S-1367-1-6	S-1367-1-10		

WIRE TABLE

ITEM NO	PART NO.	DESCRIPTION	
8	819210	RESISTOR ASSY	
7	S-1360-5L	CIRCUIT BREAKER	
6	S-1640-6	HOUSING	
5	S-1641-6	HOUSING	
4	S-1641-9	HOUSING	
3	S-1640-9	HOUSING	
2	C669502-0211	INST CLUSTER	
1	0726110	XMTR FUEL LEVEL	

EQUIPMENT TABLE

CES-1000 IS APPLICABLE
VENDOR CODES PER S-1400
CES-XXXX=CESSNA SPEC. NO.
S-XXX OR CMXXXX=CESSNA STD. NO.

SUPERSEDES:

SUPERSEDED BY: 2270001 PG 8.6

CONTRACT NO:

	NAME	DATE
DESIGN	SPENCER	3-28-77
GROUP	W.H. Wanderwalker	4-13-77
DRAWN	SCHIFFELBEIN	3-16-77
CHECK	J. YOUNEL	3-18-77
STRESS		
PROJ	J.L. MOORE	4-14-77
APPD	JJB	
OTHER		

Cessna AIRCRAFT CO. PAWNEE DIVISION 5800 E. PAWNEE WICHITA, KANSAS

TITLE
WIRING DIAGRAM — FUEL QUANTITY INDICATOR

SIZE	CODE IDENT. NO.	DWG NO
C	71379	2270001

SCALE: NONE (SR8462) PAGE: 8.2

REVISION			
LET	DESCRIPTION	DATE	APPD
A	BY REV: "INST LTS BKR" WAS "FUEL QUANTITY" (SR8462)(REF)	DLP 10-18-77	JAB

NOTES:

1. BURNDY YZ14-H FURNISHED WITH 0550209 SENDING UNIT

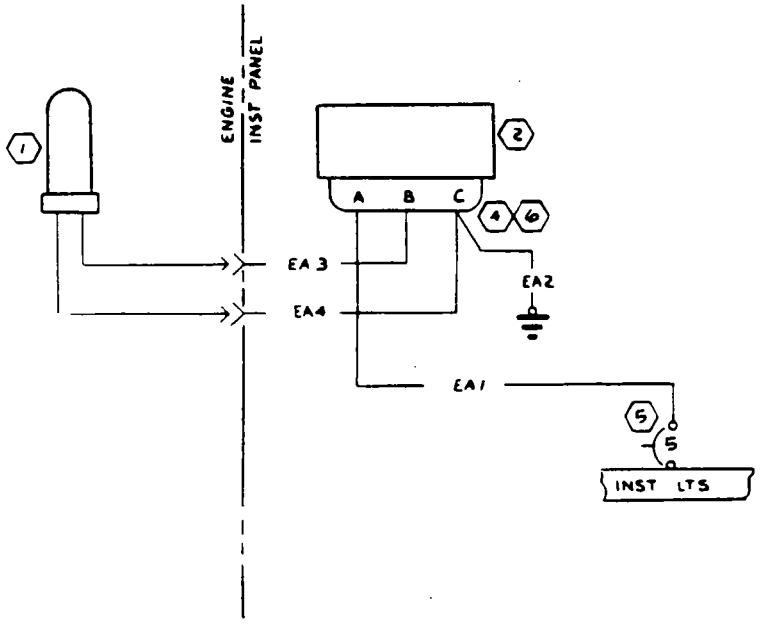

WIRE CODE NO	GA	MATERIAL	LG	TERMINALS			SERIALS
EA4	22			SOLDER	YZ14-H	1.	
EA3	22			SOLDER	YZ14-H	1.	
EA2	22			SOLDER	S1367-1-8		
EA1	22			SOLDER	S1367-1-6		

WIRE TABLE

ITEM NO	PART NO.	DESCRIPTION
6	MS3057-6A	CLAMP
5	S-1360 SL	CIRCUIT BREAKER
4	MS3106A-14S-7S	PLUG
3	C669502-0211	INST CLUSTER
2	S-311-4	INDICATOR
1	0550209-	SENDING UNIT-CARB AIR

EQUIPMENT TABLE

CES-1000 IS APPLICABLE
VENDOR CODES PER S-1400
CES-XXXX-CESSNA SPEC. NO.
S-XXX OR CMXXXX-CESSNA
STD. NO.

SUPERSEDES.

SUPERSEDED BY.

CONTRACT NO.

	NAME	DATE
DESIGN	SPENCER	3-28-77
GROUP	W. L. Anderson	4-13-77
DRAWN	SCHIFFELBEIN	3-16-77
CHECK	J YOUEL	3-18-77
STRESS		
PROJ	J. H. WOOTEN	4-4-77
APPD	MRS	
OTHER		

Cessna AIRCRAFT CO.
PAWNEE DIVISION
5800 E. PAWNEE
WICHITA KANSAS

TITLE
WIRING DIAGRAM—
CARBURETOR AIR TEMP
(OPT)

SIZE	CODE IDENT. NO.	DWG NO
C	71379	2270001

SCALE NONE (SR8462) PAGE: 8.3

REVISION			
LET	DESCRIPTION	DATE	APPD
A	BY REV: S-1367-1-8/DF1 WAS S-1367-1-6, S-1367-1-8/DF2 WAS S-1367-1-6 (NOW SHOP PRACTICE) R182E0655	CRS 12-14-77	
B	BY REV: ADD NOTE 1, RED(DF4), S1360-5L, C664511-0101, DETAIL A & PG 8.9.1; C664503-0101 WAS C664502 (SR9080)(REF)(SR9187)	CMK 7-13-78	
C	BY REV: S-2443-1 WAS S-1580-1, PA14 REF WAS PA1(REF), GRN(DC9)(REF) WAS GRN(DC4)(REF), RED(DC10)(REF) WAS RED(DC1)(REF) (SR 9112)	HHG 2-19-79	
D	BY REV: S-2475-1 WAS S-2443-1 DC8(REF) WAS DC2(REF), C664508-0102 WAS C664508-0101 SR 9112	HHG 6-18-79	
E	BY REV: ADD REV B & C664511-0102 (SR 9583)	HHG 2-13-80	

NOTES:

1. REQD ONLY WHEN OPTIONAL DIGITAL CLOCK C664511 IS INSTALLED

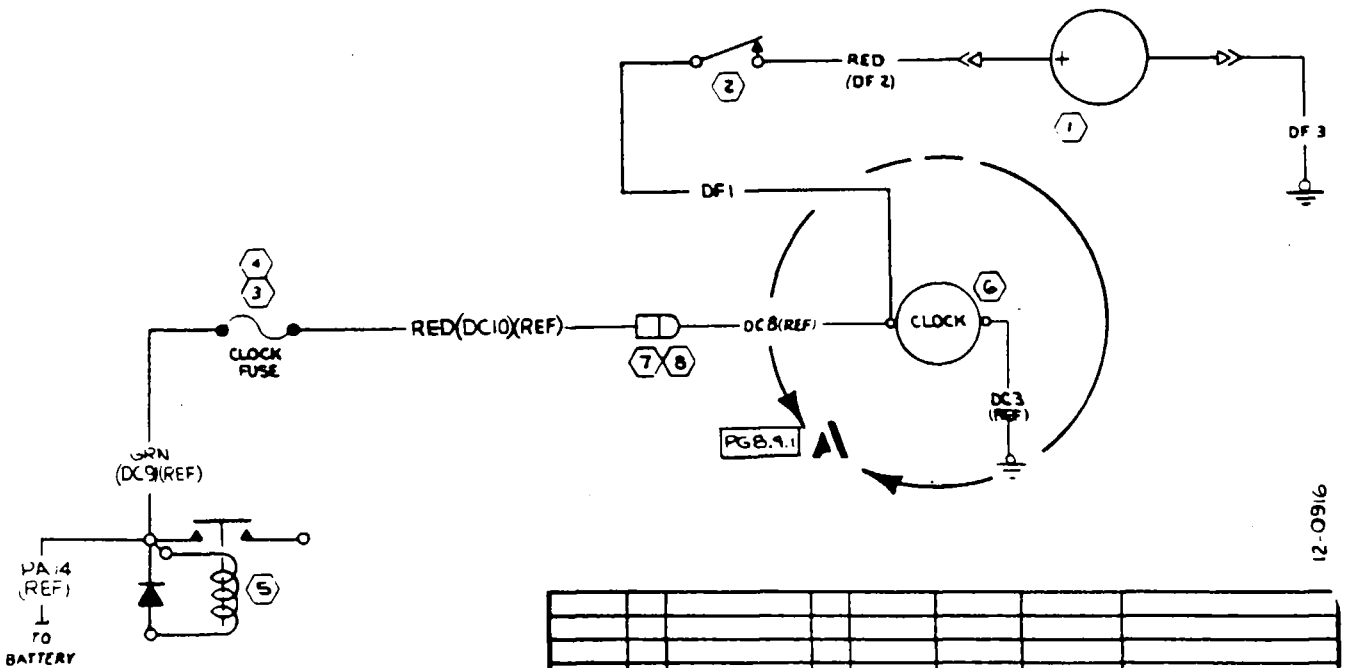

WIRE CODE NO	GA	MATERIAL	LG	TERMINALS			SERIALS
RED(DF4)	22	-22-2		S-1367-1-6	S-1635-2	1	
DF3	22			S-1493-1	S-1367-1-8		
RED (DF2)	22	-22-2		S-1493-1	S-1367-1-8		
DF1	22			S-1367-1-6	S-1367-1-8		

WIRE TABLE

ITEM NO.	PART NO.	DESCRIPTION
11	C664511-0102	DIGITAL CLOCK
10	C664511-0101	DIGITAL CLOCK
9	S-1360-5L	CIRCUIT BREAKER
8	S-1637-1	HOUSING
7	S-1637-2	HOUSING
6	C664508-0102	CLOCK ASSY
5	S-2475-1	BATTERY CONTACTOR
4	S-1090-22	FUSEHOLDER
3	S-1091-1	FUSE
2	S-1711-1	OIL PRESSURE SWITCH
1	C664503-0101	HOURMETER

EQUIPMENT TABLE

CES-1000 IS APPLICABLE
VENDOR CODES PER S-1400
CES-XXXX=CESSNA SPEC. NO.
S-XXX OR CMXXXX=CESSNA STD. NO.

SUPERSEDES:

SUPERSEDED BY:

CONTRACT NO:

	NAME	DATE
DESIGN	SPENCER	3-28-77
GROUP	D.A. Hardin	4-13-77
DRAWN	SCHIFFELBEIN	3-16-77
CHECK	J. YOUEL	3-18-77
STRESS		
PROJ	J.H. MOORE	4-4-77
APPD	JRS	
OTHER		

Cessna AIRCRAFT CO.
PAWNEE DIVISION
5800 E. PAWNEE
WICHITA, KANSAS

TITLE
WIRING DIAGRAM — HOURMETER (OPT)

SIZE C | CODE IDENT NO 71379 | DWG NO 2270001

SCALE: NONE | (SR 8962) | PAGE: 3 of 9

REVISION			
LET	DESCRIPTION	DATE	APPD
E	SEE PG. 8.4.0 FOR REVISION		

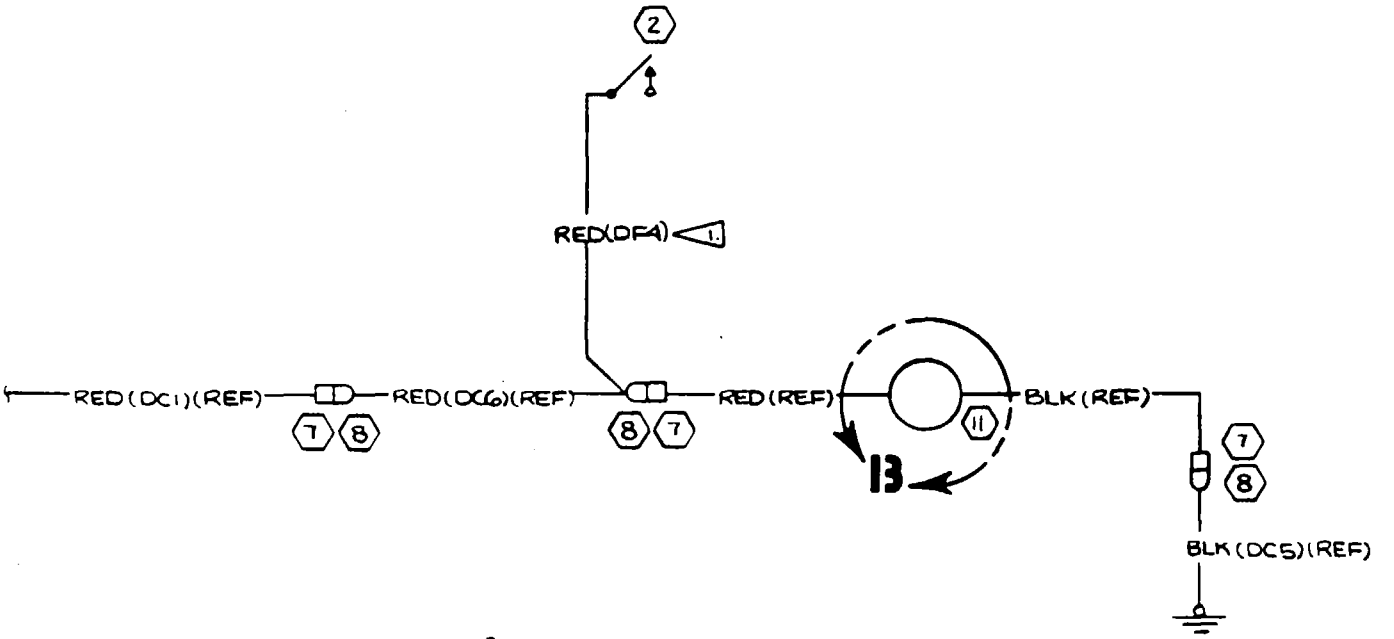

DETAIL A PG 8.4.0
(REQD WHEN OPT DIGITAL CLOCK IS INSTALLED)

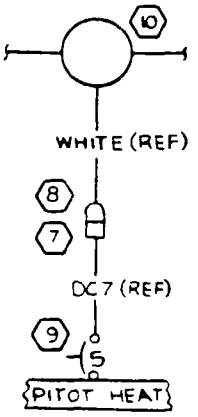

DETAIL 13
THRU SER. SR9583)

CONTRACT NO			Cessna AIRCRAFT CO. PAWNEE DIVISION 5800 E PAWNEE WICHITA KANSAS		
	NAME	DATE	TITLE WIRING DIAGRAM - HOURMETER (OPT)		
DESIGN	G STAMM	7-20-78			
GROUP	[illegible]	7-24-78			
DRAWN	C KING	7-13-78			
CHECK	BORLESKE	7-19-78			
STRESS					
PROJ	J.H. MOORE	7-24-78	SIZE C	CODE IDENT NO 71379	DWG NO 2270001
APPD					
OTHER			SCALE NONE	(SR9187)	PAGE Y.4.1

NOTES:

1. MATERIAL IS ALPHA 5857-7 (VENDOR CODE 92194) OR BELDEN 83009-1 (VENDOR CODE 70903)

2. MATERIAL IS ALPHA 5857-6 (VENDOR CODE 92194) OR BELDEN 83009-6 (VENDOR CODE 70903)

3. ~~CRIMP S-1636-5 TERMINAL AROUND WIRE INSULATION, BEND .25 OF STRIPPED WIRE BACK OVER CRIMP AND SOLDER PER CES1040. USE MOLEX HT-1921 CRIMPING TOOL ONLY~~

4. REQD ON TR182 INSTALLATIONS

REVISION			
LET	DESCRIPTION	DATE	APPD
A	BY REV: S-1367-1-10 WAS S-1636-5 ADD RED(EC3), RED(EE2), RED(EB7)(REF) (SR8782)	RLY 4-10-78	JAB JWH JRB
B	BY REV S-2334-2 WAS S-2334-1 (SR8782)	LSS 5-2-78	JRB
C	BY REV: ADD BRN(EC4) & FLAGNOTE 4; DELETE FLAGNOTE 3; S-1367-1-4 WAS S-1636-5/BRN (EC2) (NOW SHOP PRACTICE) (SR8782)	CMK 7-13-78	JAB JWH JRB
D	BY REV: S-2334-1 WAS S-2334-2 (NOW SHOP PRACTICE)	HHG 2-16-79	JRB
E	BY REV: ADD DETAIL "A" (SR 9112)	HHG 5-24-79	JRB

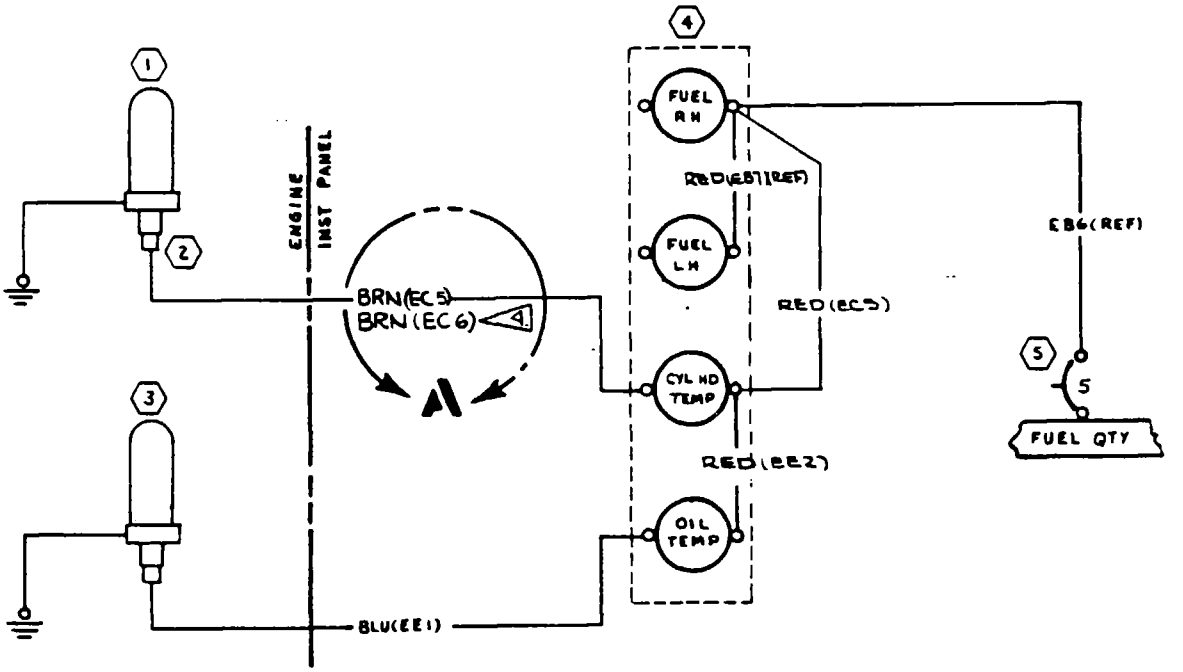

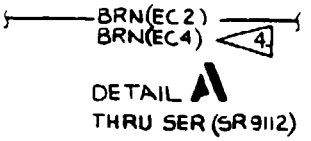

DETAIL A
THRU SER (SR 9112)

WIRE CODE NO	GA	MATERIAL	LG	TERMINALS			SERIALS
BRN(EC6)	18	1		S-1367-1-10	S-1367-1-4	4	SER(SR9112) & ON
BRN(EC5)	18	1		S-1367-1-10	S-1367-1-4		SER(SR9112) & ON
BRN(EC4)	18	1		S-1367-1-10	S-1367-1-4	4	THRU SER(SR 9112)
RED(EE2)	22	-22-2		S-1367-1-10	S-1367-1-10		
RED(EC3)	22	-22-2		S-1367-1-10	S-1367-1-10		
BRN(EC2)	18	1		S-1367-1-9	S-1367-1-10		THRU SER (SR 9112)
BLU(EE1)	18	1		S-1367-1-10	S-1367-1-10		

WIRE TABLE

ITEM NO	PART NO.	DESCRIPTION
5	S-1360-5L	CIRCUIT BREAKER
4	C669545-0102	INST CLUSTER
3	S-2335-1	SENDING UNIT
2	S-1637-4	HOUSING-PLUG
1	S-2334-1	SENDING UNIT

EQUIPMENT TABLE

CES-1000 IS APPLICABLE
VENDOR CODES PER S-1400
CES-XXXX-CESSNA SPEC. NO.
S-XXX OR CMXXXX-CESSNA STD. NO.

SUPERSEDES: 2270001 P 8.1

SUPERSEDED BY:

CONTRACT NO:

	NAME	DATE
DESIGN	SPENCER	2-21-78
GROUP	W H Harden	3-1-78
DRAWN	SHAVER	2-13-78
CHECK	J. BLISS	2-16-78
STRESS		
PROJ	J. MOORE	3-2-78
APPD		
OTHER		

Cessna AIRCRAFT CO.
PAWNEE DIVISION
5800 E. PAWNEE
WICHITA, KANSAS

TITLE
WIRING DIAGRAM — CYLINDER HEAD TEMP & OIL TEMPERATURE

SIZE C | CODE IDENT NO 71379 | DWG NO 2270001

SCALE: NONE | (SR 8782) | PAGE: 8.5

REVISION			
LET	DESCRIPTION	DATE	APPD
A	BY REV: ADD RED(EB7); DELETE 22 GA JUMPER (3), OIL TEMP & CYL HD TEMP INDICATORS (SR8782)	CMK 5-5-78	

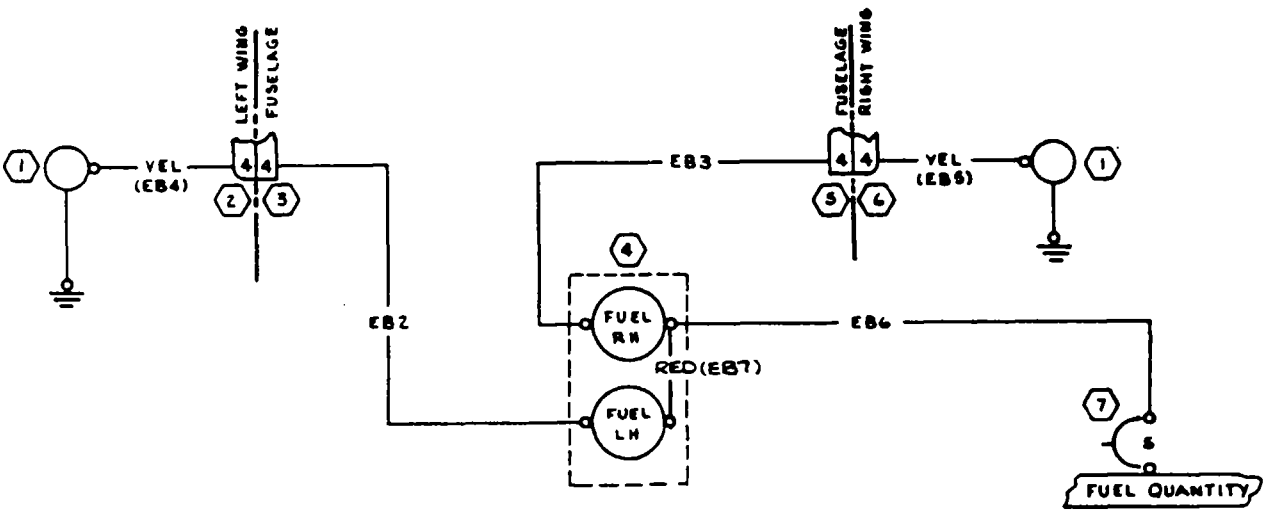

RED(EB7)	22	-22-2		S-1367-1-10	S-1367-1-10		
EB6	22			S-1367-1-10	S-1367-1-8		
EB5(YEL)	22	-22-4		S-1367-1-10	S-1635-1		
EB4(YEL)	22	-22-4		S-1367-1-10	S-1635-1		
EB3	22			S-1367-1-10	S-1636-1		
EB2	22			S-1367-1-10	S-1636-1		
WIRE CODE NO	GA	MATERIAL	LG	TERMINALS			SERIALS

WIRE TABLE

ITEM NO	PART NO.	DESCRIPTION
7	S-1360-SL	CIRCUIT BREAKER
6	S-1640-9	HOUSING
5	S-1641-9	HOUSING
4	C669545-0102	INST CLUSTER
3	S-1641-6	HOUSING
2	S-1640-6	HOUSING
1	C668050	FUEL LEVEL XMTR

EQUIPMENT TABLE

CES-1000 IS APPLICABLE
VENDOR CODES PER S-1400
CES-XXXX=CESSNA SPEC. NO.
S-XXX OR CMXXXX=CESSNA STD. NO.

SUPERSEDES: 2270001 P 8.2

SUPERSEDED BY:

CONTRACT NO:

	NAME	DATE
DESIGN	SPENCER	2-21-78
GROUP	W. H. Harding	3-1-78
DRAWN	SHAVER	2-15-78
CHECK	J. BLISS	2-16-78
STRESS		
PROJ	D. MOORE	3-2-78
APPD		
OTHER		

Cessna AIRCRAFT CO.
PAWNEE DIVISION
5800 E. PAWNEE
WICHITA, KANSAS

TITLE
WIRING DIAGRAM — FUEL QUANTITY INDICATORS

SIZE C | CODE IDENT NO. 71379 | DWG NO 2270001

SCALE: NONE | (SR8782) | PAGE: 8.6

REVISION			
LET	DESCRIPTION	DATE	APPD

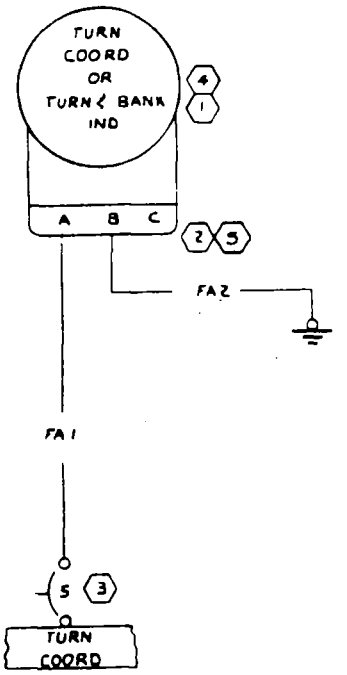

FA2	22			SOLDER	5-1367-1-8		
FA1	22			5-1367-1-6	SOLDER		
WIRE CODE NO	GA	MATERIAL	LG	TERMINALS			SERIALS

WIRE TABLE

5	MS 3057-4A	CLAMP	
4	5-1303-2	INDICATOR, T & B	
3	5-1360-5L	CIRCUIT BREAKER	
2	MS3106A10SL3S	CONNECTOR	
1	C661003-0505	TURN COORDINATOR	
ITEM NO	PART NO.	DESCRIPTION	

EQUIPMENT TABLE

CES-1000 IS APPLICABLE
VENDOR CODES PER S-1400
CES-XXXX=CESSNA SPEC. NO.
S-XXX OR CMXXXX=CESSNA STD. NO.

SUPERSEDES:

SUPERSEDED BY:

CONTRACT NO:

	NAME	DATE
DESIGN	SPENCER	3-28-77
GROUP	W. H. Andrew	4-13-77
DRAWN	SCHIFFELBEIN	3-16-77
CHECK	J. YOUEL	3-18-77
STRESS		
PROJ	J. W. MOORE	4-14-77
APPD	JRG	
OTHER		

Cessna AIRCRAFT CO.
PAWNEE DIVISION
5800 E. PAWNEE
WICHITA, KANSAS

TITLE
WIRING DIAGRAM —
TURN COORDINATOR (STD)
TURN & BANK INDICATOR (OPT)

SIZE	CODE IDENT. NO.	DWG NO
C	71379	2270001

SCALE: NONE (SRB462) PAGE: 9.1

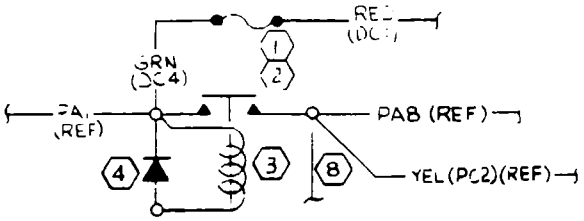

DETAIL B
EFF THRU SER(SR9112)

REVISION			
LET	DESCRIPTION	DATE	APPD
A	BY REV 1553112 WAS "TO STARTER CONTACTOR" ADD PA8 (REF) & PC2 (REF) (SR8462)(REF)	DLP 10-18-77	JAB/DWN
B	BY REV: ADD RED DC8 (NOTE 1); DETAIL "A" (SER. C664508-0102 WAS C664508-0101 (SR9195)(REF)	BGK 10-6-78	JAB/DWN
C	BY REV: ADD DETAIL B (SR 9112)	HHG 2-19-79	JAB/DWN
D	BY REV: S-2475-1 WAS S-2443-1 (SR 9112)	HHG 6-18-79	
E	BY REV: DC12 WAS DC10, DC11 WAS DC9 (SR10152)	GW 5-1-81	JAB/DWN

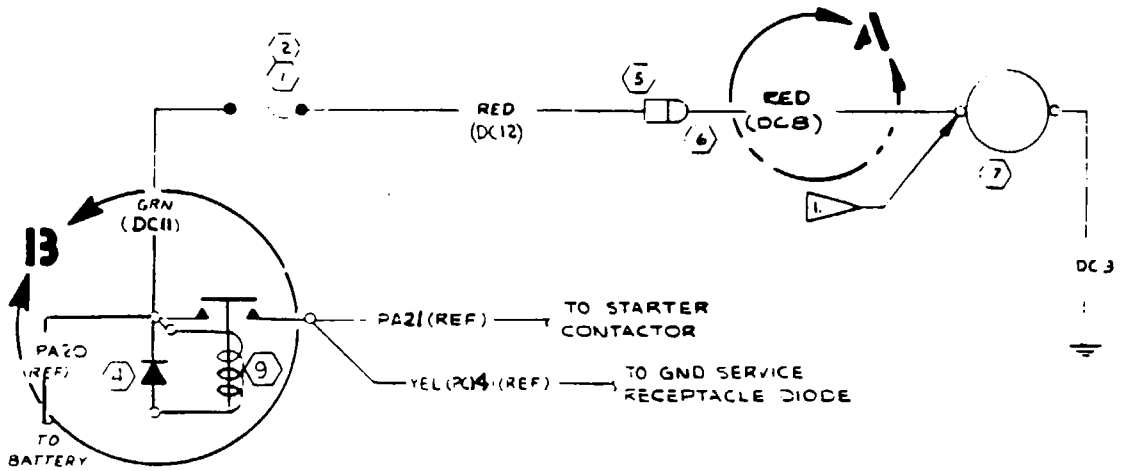

NOTES:

1. CAUTION: POWER WIRE MUST BE CONNECTED TO "BATT" TERMINAL OF CLOCK OTHERWISE INTERNAL DAMAGE TO UNIT WILL RESULT

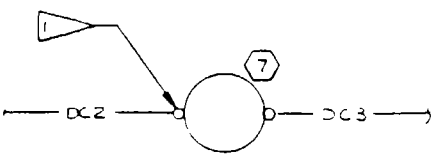

DETAIL A
THRU SER (SR 9195)

WIRE CODE NO	GA	MATERIAL	LG	TERMINALS			SERIALS
GRN (DC11)	22	-22-5	2	S-1367-1-13	SOLDER		SER (SR10152) & ON
RED (DC12)	22	-22-2		S-1636-1	SOLDER		SER (SR10152) & ON
RED (DC8)	22	-22-2		S-1636-1	SOLDER		(SR9112) THRU (SR10152)
GRN (DC3)	22	-22-5		S-1367-1-13	SOLDER		(SR9112) THRU (SR10152)
RED (DC8)	22	-22-2		S-1635-1	S-1367-1-6		SER (SR9195) & ON
GRN (DC4)	22	-22-5		S-1367-1-13	SOLDER		THRU SER (SR9112)
DC3	22			S-1367-1-6	S-1367-1-8		
DC2	22			S-1635-1	S-1367-1-6		THRU SER (SR9195)
RED (DC4)	22	-22-2		S-1636-1	SOLDER		THRU SER (SR9112)

WIRE TABLE

ITEM NO	PART NO.	DESCRIPTION
9	S-2475-1	CONTACTOR
8	1553112	BUS BAR ASSY
7	C664508-0102	CLOCK ASSY
6	S-1637-1	HOUSING
5	S-1637-2	HOUSING
4	0770728	DIODE ASSY
3	S-1580-1	BATTERY CONTACTOR
2	S-1090-22	FUSE HOLDER
1	S-091-	FUSE

EQUIPMENT TABLE

CES-1000 IS APPLICABLE
VENDOR CODES PER S-1400
CES-XXXX-CESSNA SPEC. NO
S-XXX OR CMXXXX-CESSNA
STD. NO.

SUPERSEDES:

SUPERSEDED BY:

CONTRACT NO:

	NAME	DATE
DESIGN	SPENCER	3-28-77
GROUP		4-15-77
DRAWN	SCHIFFELBEIN	3-16-77
CHECK	J. YOUEL	5-18-77
STRESS		
PROJ	J. MOORE	4-16-77
APPD		
OTHER		

Cessna AIRCRAFT CO.
PAWNEE DIVISION
5800 E. PAWNEE
WICHITA KANSAS

TITLE
WIRING DIAGRAM — CLOCK

SIZE	CODE IDENT NO.	DWG NO
C	71379	2270001

SCALE: NONE (SR 8462) PAGE:

NOTES:

1. INSTALL S-1636-1 ON VENDOR WIRE
2. INSTALL S-1635-1 ON VENDOR WIRE

REVISION			
LET	DESCRIPTION	DATE	APPD
A	BY REV: GRN (DC4)(REF) WAS GRN (DC9) WHITE (REF) WAS RED(REF), RED(REF) WAS BLU (REF) & RED (DC6) WAS BLU(DC6) (SR 9187)	CMK	JAB JRS
B	BY REV: S-2443-1 WAS S-1580-1, RED(DC10)(REF) WAS RED(DC1)(REF) GRN(DC9)(REF) WAS GRN(DC4)(REF) (SR 9112)	HHG 2-19-79	JAB JRS JHM
C	BY REV: S-2475-1 WAS 2443-1 (SR 9112)	HHG 6-18-79	JAB JRS
D	BY REV: ADD DETAIL A & C664511-0102 (SR 9583)	HHG 2-13-80	JAB JRS

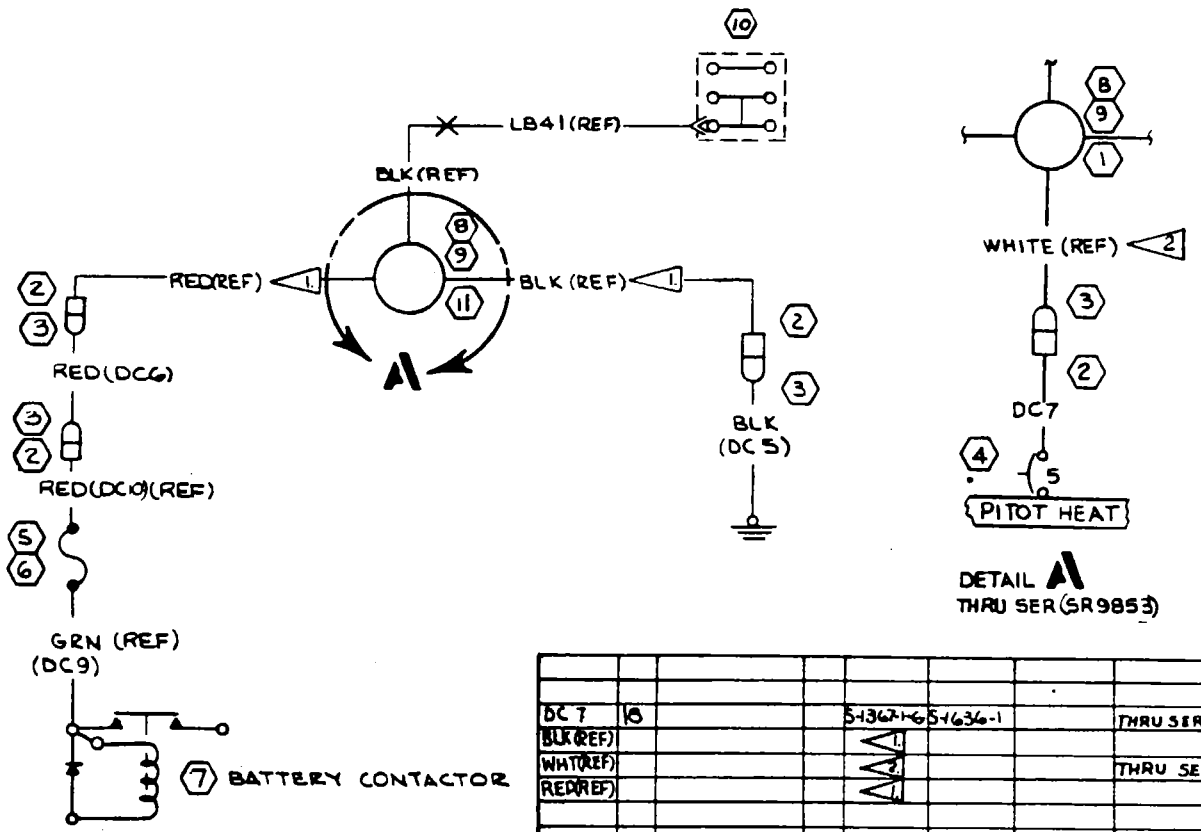

ITEM NO	PART NO.	DESCRIPTION
11	C664511-0102	DIGITAL CLOCK
10	34003-817	TERMINAL BLOCK
9	S-2413-1	SOCKET
8	MS25231-1819	LIGHT
7	S-2475-1	CONTACTOR
6	S-1091-1	FUSE
5	S-1090-22	FUSEHOLDER
4	S-1360-5L	CIRCUIT BREAKER
3	S-1637-1	HOUSING
2	S-1637-2	HOUSING
1	C664511-0101	DIGITAL CLOCK

EQUIPMENT TABLE

WIRE CODE NO	GA	MATERIAL	LG	TERMINALS			SERIALS
DC 7	18			S-1367-16	S-1636-1		THRU SER (SR 9583)
BLK (REF)				1.			
WHT (REF)				2.			THRU SER (SR 9583)
RED (REF)				1.			
RED (DC 6)	22	-22-6		S-1635-1	S-1635-1		
BLK (DC 5)	18	-18-0		S-1635-1	S-1367-18		

WIRE TABLE

CES-1000 IS APPLICABLE
VENDOR CODES PER S-1400
CES-XXXX=CESSNA SPEC. NO.
S-XXX OR CMXXXX=CESSNA STD. NO.

SUPERSEDES:

SUPERSEDED BY:

CONTRACT NO:

	NAME	DATE
DESIGN		
GROUP		
DRAWN	R. YOUNGERS	4-11-78
CHECK	BORLESKE	4-11-78
STRESS		
PROJ	J. J. MOORE	4-14-78
APPD	JRS	
OTHER		

Cessna AIRCRAFT CO.
PAWNEE DIVISION
5800 E. PAWNEE
WICHITA, KANSAS

TITLE
WIRING DIAGRAM — DIGITAL CLOCK (OPT)

SIZE	CODE IDENT NO	DWG NO
C	71379	2270001

SCALE NONE (SR9187) PAGE: 10.2

REVISION			
LET	DESCRIPTION	DATE	APPD
A	BY REV'S S-1370-1 WAS S-1370-2/LA2 MS25231-313 WAS GE1821 (NOW SHOP PRACTICE)(MER R182E0655)	CRS 12-14-77	
B	BY REV. ADD S-2160-1 SWITCH ITEM 11; S-2160-1 WAS S-1831-1 SWITCH PER DOME LT SWITCH; S-1493-1 WAS S-1830-1 TERMINAL ON LA7 & LAB WIRES (SR9A20)(REF)	GLS 6/23/81	

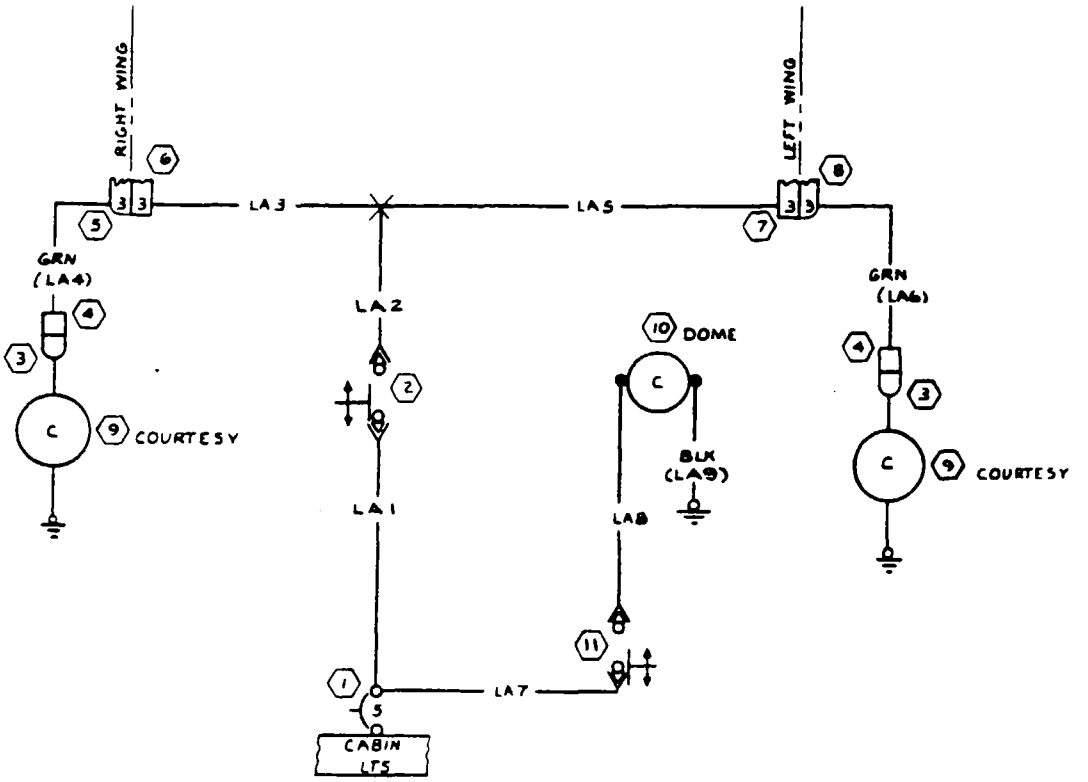

WIRE CODE NO	GA	MATERIAL	LG	TERMINALS			SERIALS
BLK (LA9)	22	-22-0		SOLDER	S-1367-1-8	(STD)	
LAB	22			S-1493-1	SOLDER		
LA7	22			S-1367-1-6	S-1493-1		
GRN (LA6)	22	-22-5		S-1635-1	S-1636-1		
LA5	22			SEE LA2	S-1636-1		
GRN (LA4)	22	-22-5		S-1635-1	S-1636-1		
LA3	22			SEE LA2	S-1636-1		
LA2	22			S-1830-1	S-1370-1		
LA1	22			S-1367-1-6	S-1830-1	(STD)	

WIRE TABLE

ITEM NO	PART NO.	DESCRIPTION
11	S-2160-1	SWITCH
10	MS25231-313	LAMP
9	MS15584 B	LAMP
8	S-1640-6	HOUSING - PIN
7	S-1641-6	HOUSING - SOCKET
6	S-1641-9	HOUSING - SOCKET
5	S-1640-9	HOUSING - PIN
4	S-1637-2	HOUSING
3	S-1637-1	HOUSING
2	S-1831-1	SWITCH
1	S-1360-5L	CIRCUIT-BREAKER

EQUIPMENT TABLE

CES-1000 IS APPLICABLE
VENDOR CODES PER S-1400
CES-XXXX-CESSNA SPEC. NO.
S-XXX OR CMXXXX-CESSNA STD. NO.

SUPERSEDES:

SUPERSEDED BY:

CONTRACT NO.

	NAME	DATE
DESIGN	SPENCER	3-28-77
GROUP	W.H. Hunter	4-13-77
DRAWN	SCHIFFELBEIN	3-16-77
CHECK	J YOUEL	3-18-77
STRESS		
PROJ	J.H. MOORE	4-14-77
APPD		
OTHER /		

Cessna AIRCRAFT CO.
PAWNEE DIVISION
5800 E PAWNEE
WICHITA, KANSAS

TITLE
WIRING DIAGRAM — DOME LIGHT (STD) & COURTESY LIGHTS (OPT)

SIZE C | CODE IDENT NO 71379 | DWG NO 2270001

SCALE: NONE | (SR8462) | PAGE: 11 1

REVISION			
LET	DESCRIPTION	DATE	APPD

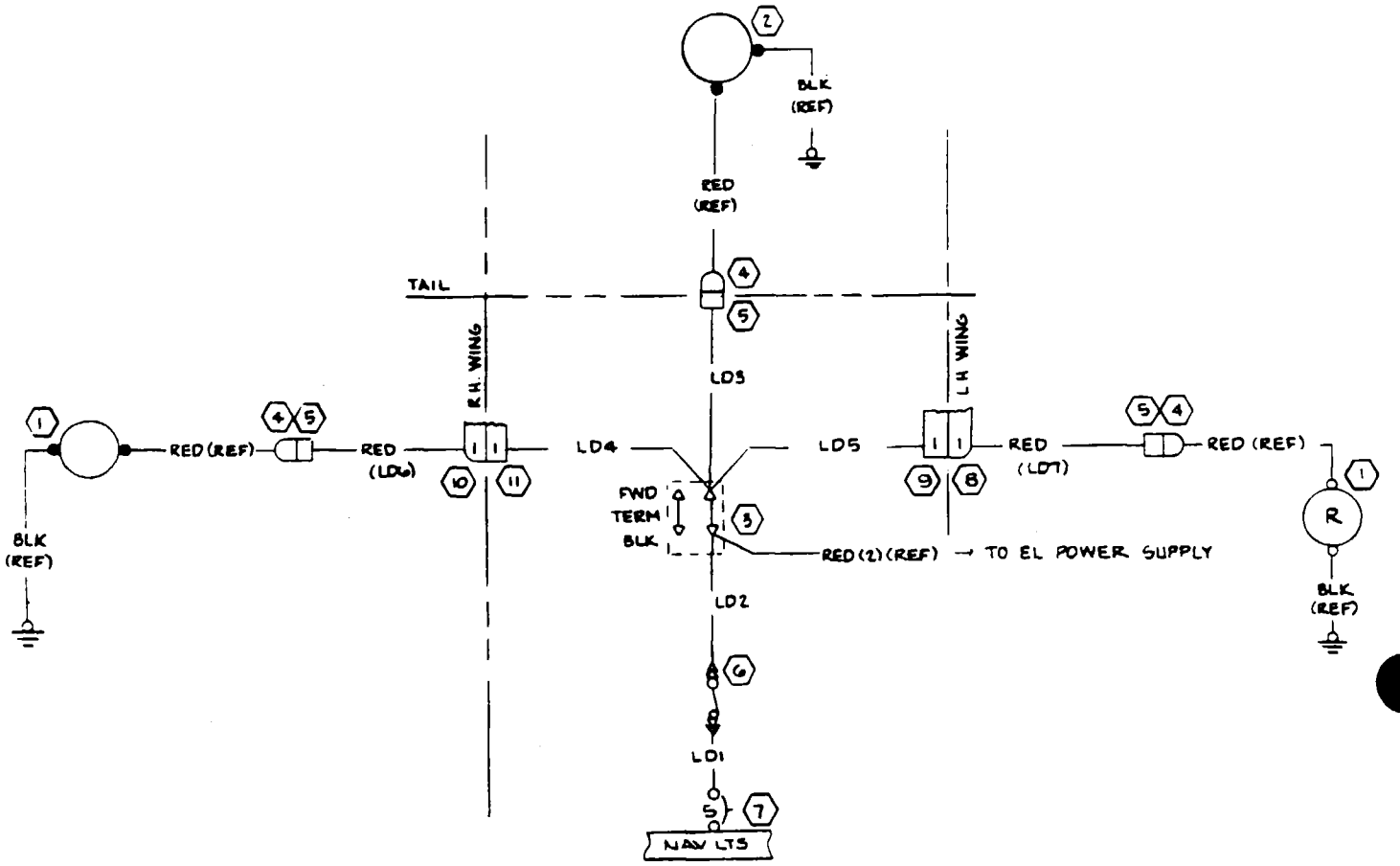

WIRE CODE NO	GA	MATERIAL	LG	TERMINALS			SERIALS
RED (D-LD7)	20	20-2		S-1635-1	S-1636-1		
RED (D-LD6)	20	20-2		S-1635-1	S-1636-1		
D-LD5	22			S-1636-1	S-1829-1		
D-LD4	↓			S-1636-1	S-1829-1		
D-LD3				S-1636-1	S-1829-1		
D-LD2	↓			S-1829-1	S-1493-1		
D-LD1	22			S-1367-1 6	S-1493-1		

WIRE TABLE

ITEM NO.	PART NO.	DESCRIPTION	
11	S-1641-9	HOUSING	
10	S-1640-9	HOUSING	
9	S-1641-6	HOUSING	
8	S-1640-6	HOUSING	
7	S-1360 5L	CIRCUIT BREAKER	
6	S-2160-1	SWITCH	
5	S-1637-2	HOUSING	
4	S-1637-1	HOUSING	
3	34002 5B	TERM BLOCK	
2	C622001-0401	LIGHT ASSY	
1	C622001-0202	LIGHT ASSY	

EQUIPMENT TABLE

CES-1000 IS APPLICABLE
VENDOR CODES PER S-1400
CES-XXXX=CESSNA SPEC. NO.
S-XXX OR CMXXXX=CESSNA STD. NO.

SUPERSEDES:

SUPERSEDED BY:

CONTRACT NO:

	NAME	DATE
DESIGN	SPENCER	3-28-77
GROUP	W.H. Hardin	4-13-77
DRAWN	HARVEY	3-16-77
CHECK	J. YOUEL	3-18-77
STRESS		
PROJ	J.H. MOORE	4/14/77
APPD		
OTHER		

Cessna AIRCRAFT CO.
PAWNEE DIVISION
5800 E. PAWNEE
WICHITA, KANSAS

TITLE
WIRING DIAGRAM — NAVIGATION LIGHTS

SIZE	CODE IDENT NO.	DWG NO
C	71379	2270001

SCALE: NONE (SR8462) PAGE: 11.2

REVISION			
LET	DESCRIPTION	DATE	APPD

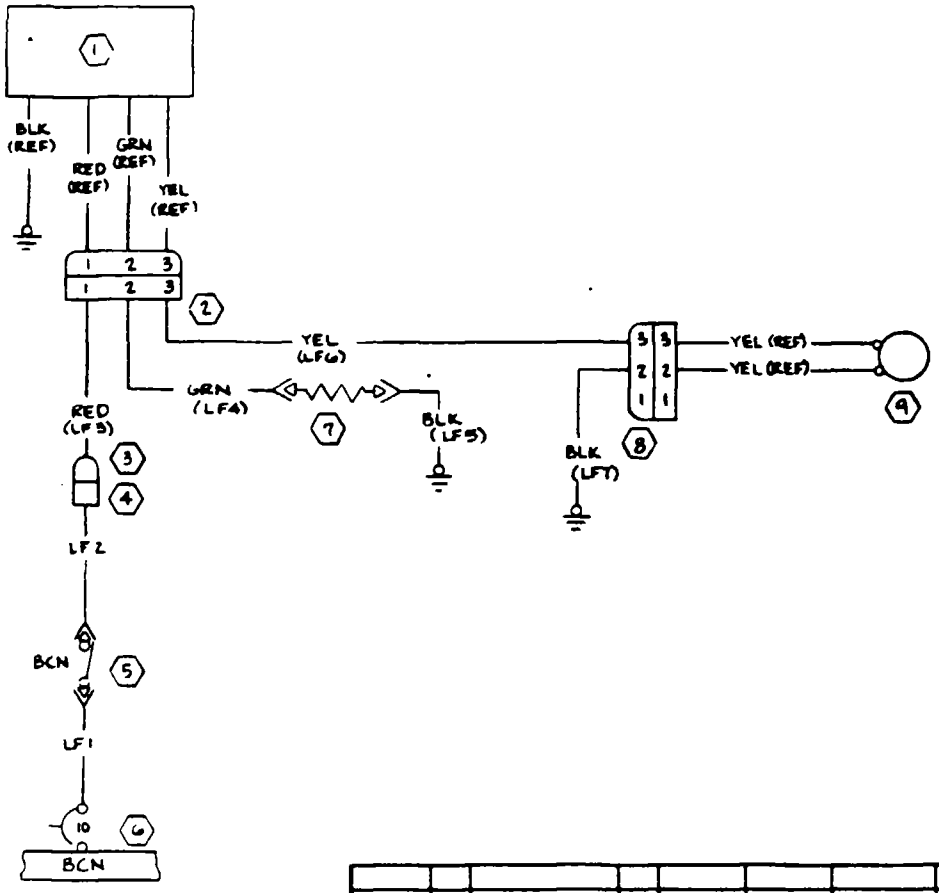

BLK (LF7)	18	-18-0		S1635-1	S1367-18		
YEL (LF6)		-18-4		S1636-1	S1635-1		
BLK (LF5)		-18-0		S1493-1	S1367-18		
GRN (LF4)		-18-5		S1636-1	S1493-1		
RED (LF3)		-18-2		S1635-1	S1636-1		
LF2				S1493-1	S1636-1		
LF1	18			S1367-16	S1493-1		
WIRE CODE NO	GA	MATERIAL	LG	TERMINALS			SERIALS

WIRE TABLE

9	C6021001-0102	LIGHT ASSY	
8	S1638-2	HOUSING	
7	OR95-6	RESISTOR	
6	S1360-10L	CIRCUIT BREAKER	
5	S2160-1	SWITCH	
4	S1637-2	HOUSING	
3	S1637-1	HOUSING	
2	S1638-1	HOUSING	
1	C594502-0102	FLASHER ASSY	
ITEM NO	PART NO.	DESCRIPTION	

EQUIPMENT TABLE

CES-1000 IS APPLICABLE
VENDOR CODES PER S-1400
CES-XXXX-CESSNA SPEC. NO.
S-XXX OR CMXXXX-CESSNA
STD. NO.

SUPERSEDES.

SUPERSEDED BY.

CONTRACT NO:

	NAME	DATE
DESIGN	SPENCER	3-28-77
GROUP	W. L. Harden	4-13-77
DRAWN	HARVEY	3-16-77
CHECK	J. YOUEL	5-18-77
STRESS		
PROJ	J. N. MOORE	4-14-77
APPD	JRS	
OTHER		

Cessna AIRCRAFT CO.
PAWNEE DIVISION
5800 E. PAWNEE
WICHITA, KANSAS

TITLE
WIRING DIAGRAM — FLASHING BEACON LIGHT (OPT)

SIZE	CODE IDENT NO	DWG NO
C	71379	2270001

SCALE: NONE (SR8462) PAGE: 11 3

NOTES

1. TO BE RETAINED IN TERMINAL WIRE MUST BE STRIPPED DOUBLED + TWISTED
2. TERMINATE VENDOR FURNISHED WIRE WITH S-1367-114
3. THIS END OF RESISTOR TERMINATED WITH S-1367-114 TERMINAL + INSTALLED ON BUSHING OF TANDEM POT ASSY DUE TO HEAT DISSIPATION RESISTOR MUST BE KEPT FROM WIRE BUNDLE
4. WHEN EL LIGHTING OPTION IS INSTALLED S-2091-3 POT REPLACES S-1904-2

REVISION			
LET	DESCRIPTION	DATE	APPD
A	BY REV ADD DETAIL A, LB44 & SER (SR9112)	DLP 2-20-79	
B	BY REV: LB47 WAS LB33, LB48 WAS LB34 (SR9951)	GLS 2/9/81	

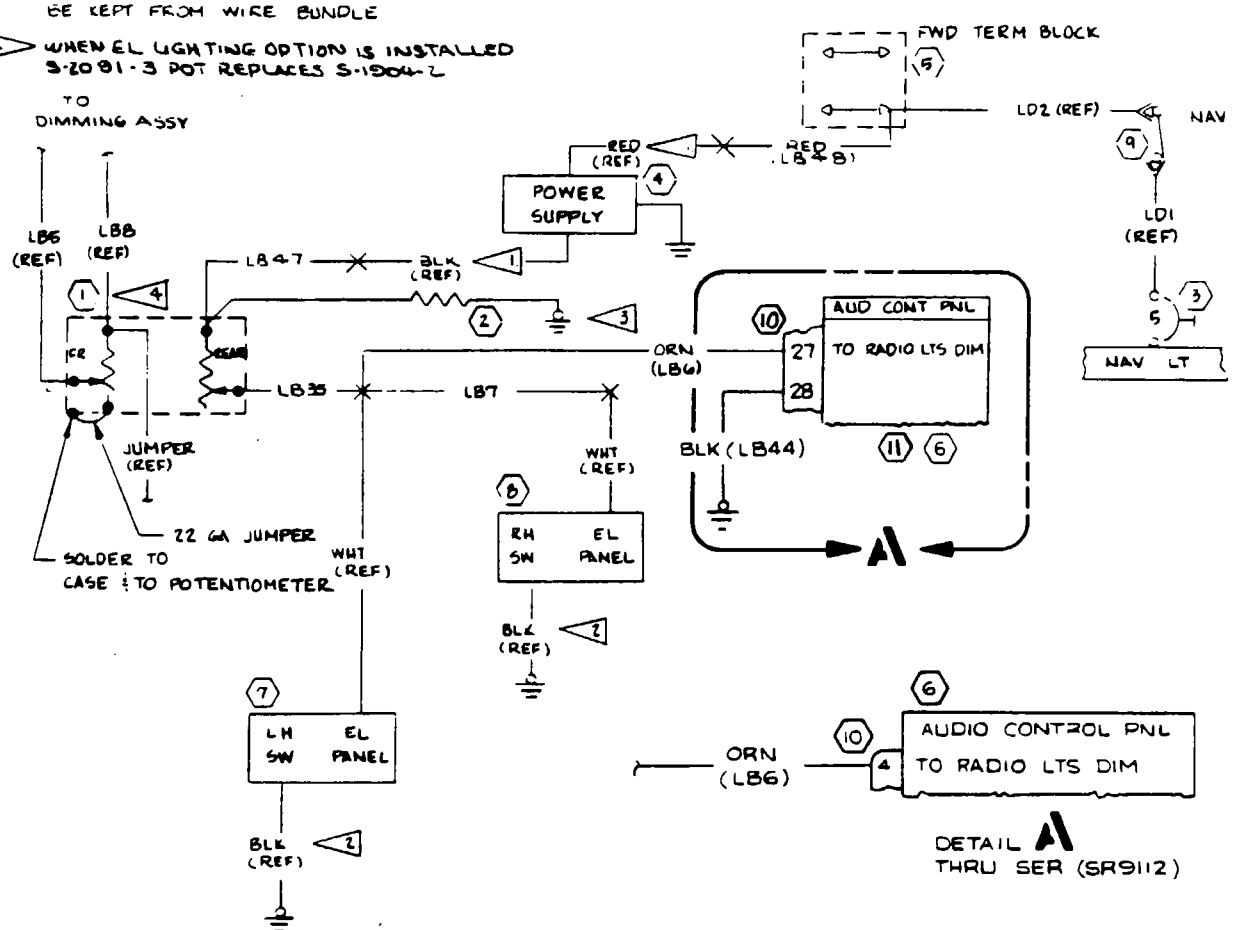

ITEM NO.	PART NO.	DESCRIPTION
11	2470003	AUD CONTROL PNL
10	87144-1	CONNECTOR
9	S-21601	SWITCH
8	1213363-11	EL PANEL
7	2213039-1	EL PANEL
6	0570442	AUDIO CONTROL PNL
5	34002-55	TERMINAL BOARD
4	C613001 0101	POWER SUPPLY
3	S-1360-5L	CIRCUIT BREAKER
2	VAL 5 6000	RESISTOR
1	S-2091-3	POT ASSY

EQUIPMENT TABLE

WIRE CODE NO	GA	MATERIAL	LG	TERMINALS			SERIALS
RED (LB48)	22			S-1829-1	S-1370-1		SER (SR9951) & ON
LB47	22			S-1370-1	SOLDER		SER (SR9951) & ON
BLK (LB44)	22	22 0		85969-6	S-1367-18		SER (SR9112) & ON
LB35	22			SOLDER	SEE LB7		
LB33	↑			S-1370-1	SOLDER		THRU SER (SR9951)
ORN (LB6)	↓	-22-3		SEE LB7	85969-6		
LB7	↓			S-1370-2	S-1370-1		
RED (LB48)	22	-22-2		S-1829-1	S-1370-1		THRU SER (SR9951)

WIRE TABLE

CES-1000 IS APPLICABLE VENDOR CODES PER S-1400 CES-XXXX=CESSNA SPEC. NO. S-XXX OR CMXXXX=CESSNA STD. NO.

SUPERSEDES:

SUPERSEDED BY:

CONTRACT NO:

	NAME	DATE
DESIGN	SPENCER	3-28-77
GROUP	W. Gordon	4-19-77
DRAWN	HARVEY	3-16-77
CHECK	J. YOUEL	3-18-77
STRESS		
PROJ	J.H. MOORE	4-4-77
APPD		
OTHER		

Cessna AIRCRAFT CO.
PAWNEE DIVISION
5800 E. PAWNEE
WICHITA, KANSAS

TITLE
WIRING DIAGRAM — ELECTRO LUMINESCENT PANEL (OPT)

SIZE C | CODE IDENT. NO. 71379 | DWG NO 2270001

SCALE: NONE | (SR8462) | PAGE: 4

G	BY REV: ADD DETAIL B: SERIAL OUT BLK (LB29) WIRE (SR9951)	GLS 5-6-81	

REVISION			
LET	DESCRIPTION	DATE	APPD
A	BY REV: MS25231-1829 WAS 1829 (SR8462)	JCS 6-27-77	
B	BY REV: DELETE LB27 WIRE; DELETE S-1637-1 & S-1637-2/ PEDESTAL LTS; ADD RED/WHT TO LB13; S-2093-7 WAS S 2093-3/NOTE 3; ADD DETAIL A; NOW SHOP PRACTICE R182-E0655 (SR8782)	CRS 2-15-78	JAB
C	BY REV: ADD LB41, NOTE 5, S2413-1 & MS25231-1819 (SR9187)	CMK 7-13-78	JAB
D	BY REV: ADD NOTE 6., S-1899 LIGHT ASSY. 22 GA JUMPERS (5) WAS (3), LB16, LB17, RED/BLU (LB42), BLK (LB43) (SR8782)	LSS 8-23-78	JAB
E	BY REV: ADD DETAIL A / SER. C669545-0105 (SR9437)	HHG 9-25-78	JAB
F	BY REV: ADD RED (LB44) BLK (LB45), RED (LB46), BLK (REF) & WHT (REF); DELETE RED/WHT (LB13) & BLK (LB30); S-1636-1 WAS SOLDER/LB16 & LB17, RED/WHT WAS RED/LB32, SOLDER WAS S-1829-1/LB32, SOLDER WAS S-1829-1/LB31 & S-1370-1 WAS S-1636-1/LB31 MER 210E0667, MER R182E0717 (NOW SHOP PRACTICE)	PSM HHG 2-21-79	

51-00916

NOTES:

1. INSTALL S-1635-1 TERMINAL ON VENDOR FURNISHED LEAD AS INDICATED
2. INSTALL S 1367-1 6 TERMINAL ON VENDOR FURNISHED WIRES AS INDICATED
3. THIS POT IS PART OF S-2091-7 DUAL POT ASSY WHEN OPTIONAL EL LIGHTING IS INSTALLED
4. WHEN POST LIGHT OPTION IS INSTALLED 1570351-1 DIMMING ASSY. REPLACES 1570166 & S2091-3 POTENTIOMETER ASSY REPLACES S1904-2.
5. REQD ONLY WHEN OPTIONAL DIGITAL CLOCK C644511 IS INSTALLED
6. OXYGEN CONSOLE WIRING IS STANDARD ON TR182. OPTIONAL ON R182

WIRE CODE NO	GA	MATERIAL	LG	TERMINALS			SERIALS
RED (LB45)	22	-22-2		S-1635-1	SOLDER		
BLK (LB44)	22	-22-0		SOLDER	S-1635-1		
RED (LB46)	22	-22-2		S-1370-1	SEE LB9		
LB41	22			S-1829-1	S-1370-1	<5	
LB40	22			S-1829-1	S-1367-1-8	SER (SR8782)	THRU (SR9437)
LB8	22			S-1635-2	SOLDER		
LB5	22			S-1635-1	SOLDER		
LB4	22			S-1635-1	SOLDER		
LB3	18			S-1635-1	S-1829-1		
LB2	18			S-1635-1	S-1829-1		
LB1	18			S 1367-1-6	SEE LB8		
LB9	22			S 1370 1	S 1829 1		
LB10 BLK				S-1370 1	S 1367-1-8		
LB11				S-1636-1	S 1829 1		
LB12				S 1829-1	S-1636 1		
LB14				S-1829-1	S 1370 1		
LB15				S 1370 1	S 1367-1-8		
LB16				S-1829-1	S-1636-1		
LB17				S-1636-1	S-1367-1-8		
LB18				S 1829 1	S 1370 1		
LB19				S 1829 1	S-1370-1		
RED/WHT (LB32)		-22-2		S 1635 1	SOLDER		
RED (LB31)		-22-2		SOLDER	S-1370-1		
BLK (LB29)		-22-0		S-1370-1	S 1367 1 4		THRU SER (SR9951)
RED BLU (LB42)		-22 2-6		SOLDER	SOLDER		
BLK (LB43)	22	22-0		SOLDER	SOLDER		

WIRE TABLE

ITEM NO	PART NO.	DESCRIPTION	
23	C669545-0105	CLUSTER	
22	S2413-1	SOCKET	<5
21	MS25231-1819	LIGHT	<5
20	C669545-0102	INSTRUMENT CLUSTER	
19	1570166	DIMMING ASSY	
18	S 1360 5L	CIRCUIT BREAKER	
17	S-2000C201J	RESISTOR	
16	S 1904-2	POT ASSY	
5	S 1640 6	HOUSING	
14	S 1641-6	HOUSING	
13	MS25231-1829	LAMP	
12	MS15584 8	MINIATURE LAMP	
11	2513206	SOCKET	
10	S 2035 1	HOUSING	
9	S 2035 2	HOUSING	
8	C660501-0102	COMPASS ASSY	
7	S-1637 1	HOUSING	
6	S 1637 2	HOUSING	
5	S 1695 2	SWITCH	
4	34003 817	TERMINAL BLOCK	
3	S-1899	LIGHT ASSY	
2	1270479	LIGHT ASSY	
	1213319	LIGHT ASSY	

EQUIPMENT TABLE

CES-1000 IS APPLICABLE
VENDOR CODES PER S-1400
CES-XXXX-CESSNA SPEC. NO.
S-XXX OR CMXXXX-CESSNA STD. NO.

SUPERSEDES.

SUPERSEDED BY.

CONTRACT NO.

	NAME	DATE
DESIGN	SPENCER	3-28-77
GROUP	W. Hunden	6-13-77
DRAWN	HARVEY	3-16-77
CHECK	J. YOUEL	3-18-77
STRESS		
PROJ	MOORE	
APPD	TRB	
OTHER /		

Cessna. AIRCRAFT CO.
PAWNEE DIVISION
5800 E PAWNEE
WICHITA KANSAS

TITLE
WIRING DIAGRAM — INSTRUMENT LIGHTS

SIZE	CODE IDENT NO	DWG NO
C	71379	2270001

SCALE NONE (SR8462) PAGE 115 (1)

REVISION			
LET	DESCRIPTION	DATE	APPD
	SEE PG 11 5 0 FOR REV		

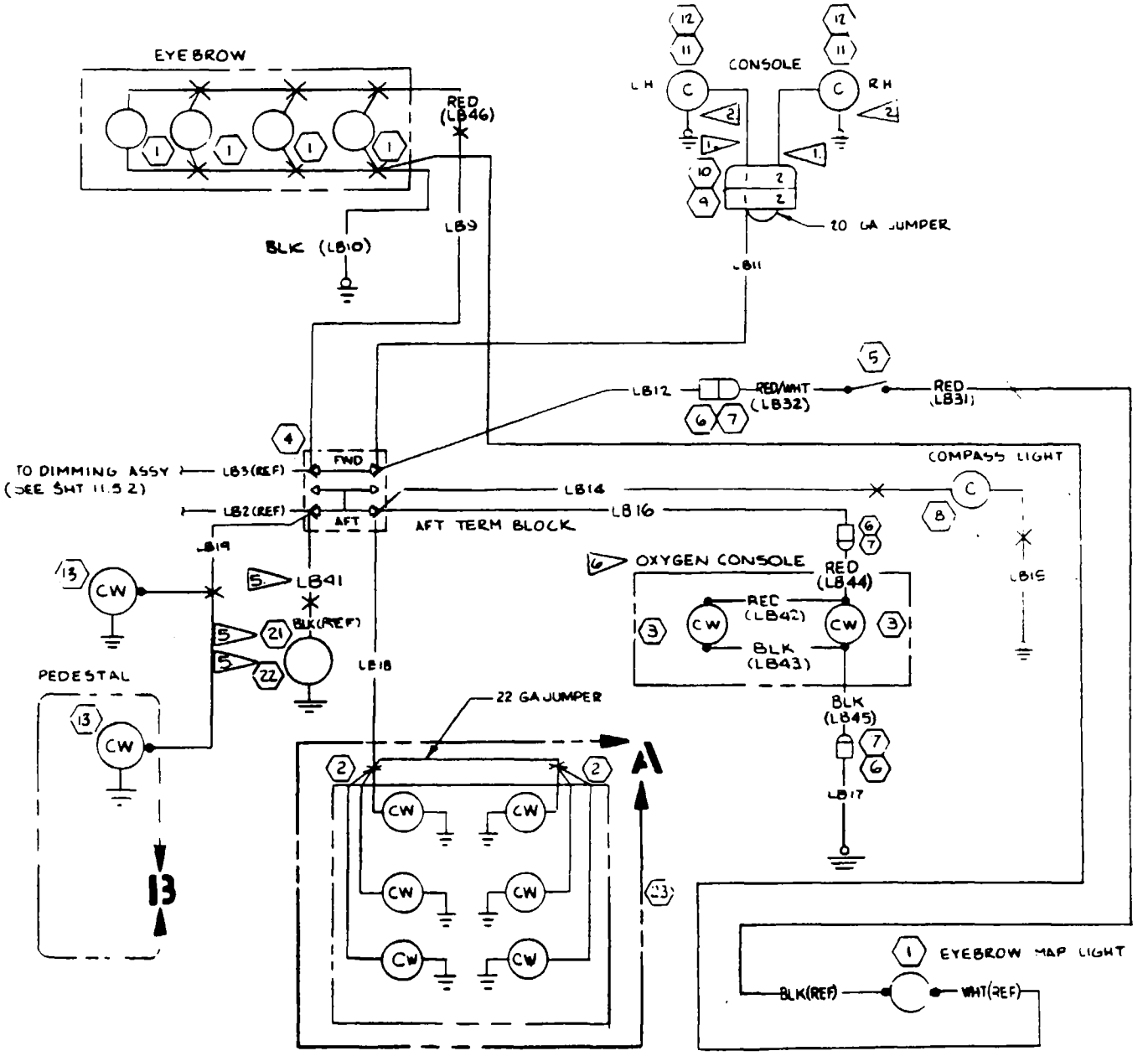

CONTRACT NO.			Cessna AIRCRAFT CO.	PAWNEE DIVISION 5800 E. PAWNEE WICHITA, KANSAS
	NAME	DATE	TITLE WIRING DIAGRAM – INSTRUMENT LIGHTS	
DESIGN	SPENCER	3-28-77		
GROUP		4-13-77		
DRAWN	HARVEY	3-16-77		
CHECK	J. YOUEL	3-18-77		
STRESS				
PROJ	J. W. MOORE	4-14-77	SIZE C	CODE IDENT NO 71379 / DWG NO 2270001
APPD				
OTHER			SCALE NONE	PAGE: 11 5 1

Instrument Lights (Sheet 1 of 2)

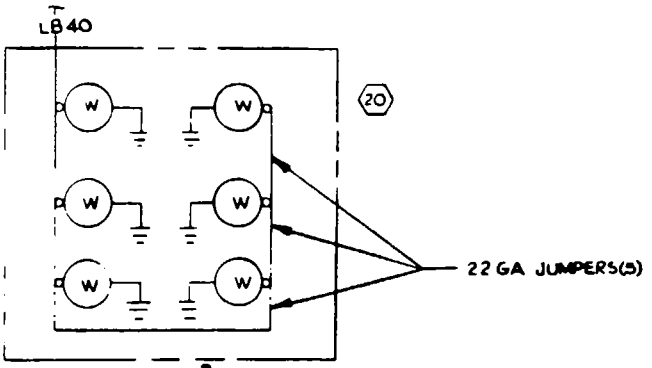

DETAIL A
SER(SR8782) THRU (SR9437)

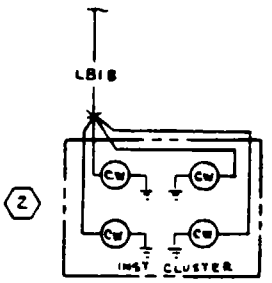

DETAIL A
THRU SER(SR8782)

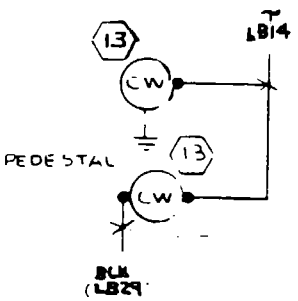

DETAIL B
THRU SER(SR9951)

CONTRACT NO.			Cessna AIRCRAFT CO.	PAWNEE DIVISION 5800 E PAWNEE WICHITA KANSAS
	NAME	DATE	TITLE WIRING DIAGRAM — INSTRUMENT LIGHTS	
DESIGN	SPENCER	3-28-77		
GROUP		4-13-77		
DRAWN	HARVEY	3-16-77		
CHECK	J YOUEL	3-18-77		
STRESS				
PROJ		4-14-77	SIZE C / CODE IDENT NO 71379	DWG NO 2270001
APPD				
OTHER			SCALE NONE (SR 8462)	PAGE 115

Instrument Lights (Sheet 2 of 2)

REVISION			
LET	DESCRIPTION	DATE	APPD

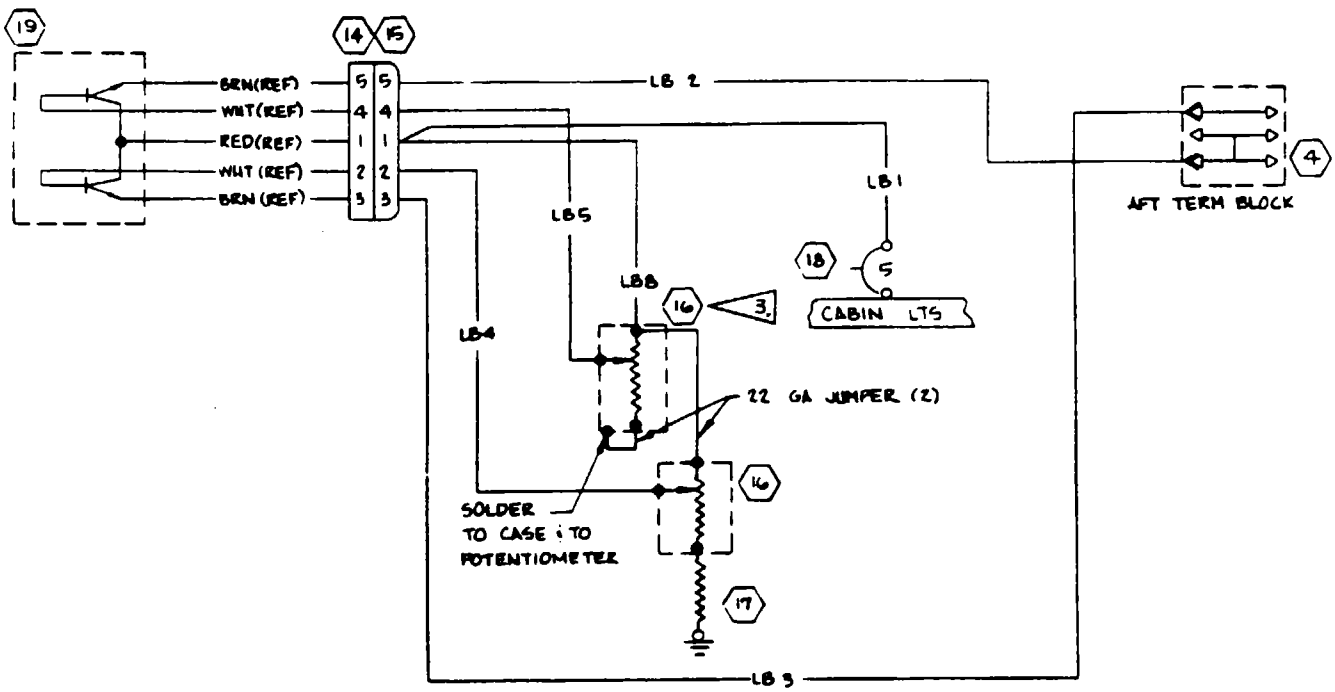

CONTRACT NO:			Cessna AIRCRAFT CO.	PAWNEE DIVISION 5800 E. PAWNEE WICHITA, KANSAS
	NAME	DATE	TITLE	WIRING DIAGRAM - INSTRUMENT LIGHTS
DESIGN	SPENCER	3-28-77		
GROUP	W.B. Hardison	4-13-77		
DRAWN	HARVEY	3-16-77		
CHECK	J. Youel	3-18-77		
STRESS				
PROJ	J.L. MOORE	4-14-77	SIZE C	CODE IDENT. NO. 71379 / DWG NO. 2270001
APPD	JRS			
OTHER			SCALE: NONE	(SR8462) / PAGE: 11.5 2

REVISION			
LET	DESCRIPTION	DATE	APPD
A	BY REV: ADD S-1985-1; BLK(REF) WAS BLK, WHT(REF) WAS RED(2) (SR8462)(REF)	CRS 11-21-77	
B	BY REV: BLK(REF) WAS BLK (LB39) (NOW SHOP PRACTICE)(MERI82-EO-0829)	DFS 8-5-80	

NOTES:

1. FOR INTERCONNECTION WITH ELECTRIC ELEVATOR TRIM SEE PAGE 14.2

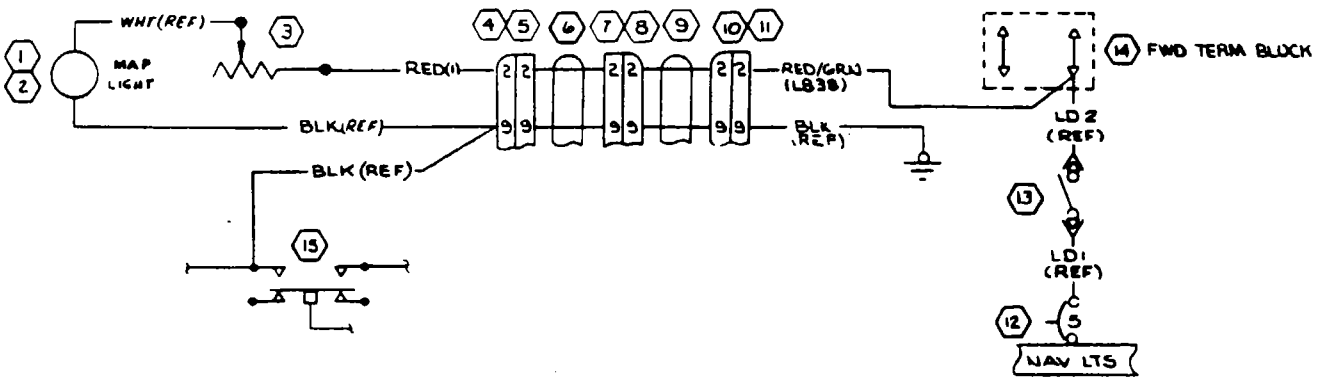

INACTIVE THRU SER(SR9632) 5-19-80

32-0916

15	S-1985-1	MIKE SWITCH	
14	34002-55	TERMINAL BLOCK	
13	S-2160-1	SWITCH	
12	S-1360-5L	CIRCUIT BREAKER	
11	S-1961-2-0	HOUSING	
10	S-1961-1-0	HOUSING	
9	1570307	CABLE	
8	1570307	CONNECTOR ASSY	
7	3421-0000	CONNECTOR SOCKET	
6	1270844	CABLE	
5	3473-3000	CONNECTOR SOCKET	
4	1270842	CONNECTOR ASSY	
3	3859A161-152A	RHEOSTAT	
2	24RB	LAMP	
1	4157-001	SOCKET	
ITEM NO	PART NO.	DESCRIPTION	

EQUIPMENT TABLE

WIRE CODE NO	GA	MATERIAL	LG	TERMINALS			SERIALS
RED(1)	22	8568-2		SOLDER	SOLDER		
RED/GRN (LB38)	22	22-2-5		S-1963-2	S-1829-1		

WIRE TABLE

CES-1000 IS APPLICABLE
VENDOR CODES PER S-1400
CES-XXXX-CESSNA SPEC. NO.
S-XXX OR CMXXXX-CESSNA STD. NO.

SUPERSEDES:

SUPERSEDED BY: P 11.12

CONTRACT NO:

	NAME	DATE
DESIGN	SPENCER	3-28-77
GROUP	D. H. Harden	4-13-77
DRAWN	L. STOREY	3-16-77
CHECK	J YOUEL	3-18-77
STRESS		
PROJ	J. H. MOORE	4-14-77
APPD		
OTHER		

Cessna AIRCRAFT CO.
PAWNEE DIVISION
5800 E PAWNEE
WICHITA, KANSAS

TITLE
WIRING DIAGRAM — MAP LIGHT CONTROL WHEEL (OPT)

SIZE	CODE IDENT NO.	DWG NO
C	71379	2270001

SCALE: NONE (SR8462) PAGE: 11.6

REVISION			
LET	DESCRIPTION	DATE	APPD
A	BY REV C622008-0102 WAS C622007-0103; C622006-0107 WAS -0101 (SR8462)(REF)	DLP 10-18-77	JABWH JRS LP
B	BY REV: ADD DETAIL 'A', S-1232-5, LD13 & SER (SR9632)	RAO 3-14-80	RH WH JRS LWF
C	BY REV: ADD DETAIL 'A', REACTIVATE LD8 (SR 10099)	REK 10-22-81	MOP JRS

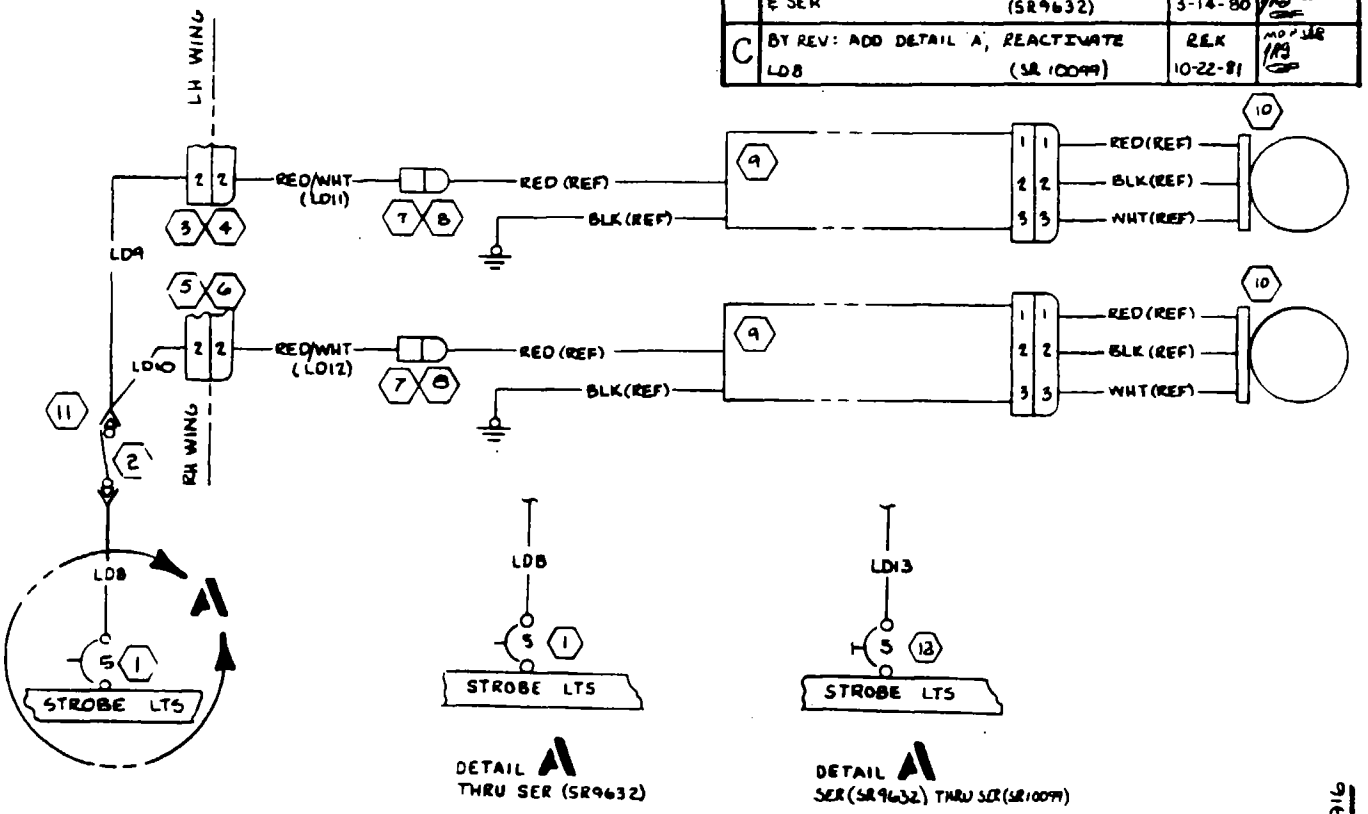

99-00916

LD13	22			S-1367-1-8	S-1493-1		SER (SR9632) THRU SER (SR10099)
RED/WHT (LD12)	20	-20-2-9		S-1636-1	S-1635-1	(STD)	
RED/WHT (LD11)	20	-20-2-9		S-1636-1	S-1635-1	(STD)	
LD10	22			S-1493-1	S-1636-1	(STD)	
LD9	22			S-1493-1	S-1636-1	(STD)	
LD8	22			S-1367-1-6	S-1493-1		SER (SR10201) & ON
WIRE CODE NO	GA	MATERIAL	LG	TERMINALS			SERIALS

WIRE TABLE

12	S-1232-5	CIRCUIT BREAKER	
11	S-2023-1	TERMINAL ADAPTOR	
10	C622006-0107	LAMP ASSY	
9	C622008-0102	POWER SUPPLY	
8	S-1637-1	HOUSING	
7	S-1637-2	HOUSING	
6	S-1640-9	HOUSING	
5	S-1641-9	HOUSING	
4	S-1640-6	HOUSING	
3	S-1641-6	HOUSING	
2	S-2160-1	SWITCH	
1	S-1360-5L	CIRCUIT BREAKER	
ITEM NO	PART NO.	DESCRIPTION	

EQUIPMENT TABLE

CES-1000 IS APPLICABLE
VENDOR CODES PER S-1400
CES-XXXX=CESSNA SPEC. NO.
S-XXX OR CMXXXX=CESSNA STD. NO.

SUPERSEDES:

SUPERSEDED BY:

CONTRACT NO:

	NAME	DATE
DESIGN	SPENCER	3-28-77
GROUP	D. Hawkins	4-13-77
DRAWN	HARVEY	5-16-77
CHECK	J. YOUEL	3-18-77
STRESS		
PROJ	J.H. MOORE	4-4-77
APPD	JRS	
OTHER		

Cessna AIRCRAFT CO.
PAWNEE DIVISION
5800 E. PAWNEE
WICHITA, KANSAS

TITLE
WIRING DIAGRAM — WING TIP STROBE LIGHTS (OPT)

SIZE	CODE IDENT. NO.	DWG NO
C	71379	2270001

SCALE: NONE | (SR8462) | PAGE: 11 7

NOTES.

1. MATERIAL IS ALPHA 5857-7 (VENDOR CODE 92194) OR BELDEN 83009-1 (VENDOR CODE 70903)

2. MATERIAL IS ALPHA 5857-6 (VENDOR CODE 92194) OR BELDEN 83009-6 (VENDOR CODE 70903)

REVISION			
LET	DESCRIPTION	DATE	APPD
A	BY REV: DELETE S-1640-6, S-1641-6, LC4, LC5, LC8 & LC9; S-1367-1-8/LC2 & LC3 WAS S-1636-1, S-1367-1-12 WAS S-1635-1, S-1367-1-6/LC1 & LC10 WAS S-1367-1-8 (SR8462)(REF)	DLP 10-18-77	JAB WHH JRS
B	BY REV: ADD DETAIL "A", NOTE 1 & 2, BLU(LC11), BRN(LC12), BRN(LC13) BRN(LC14) (SR8782)	LSS 8-14-78	JAB WHH JRS

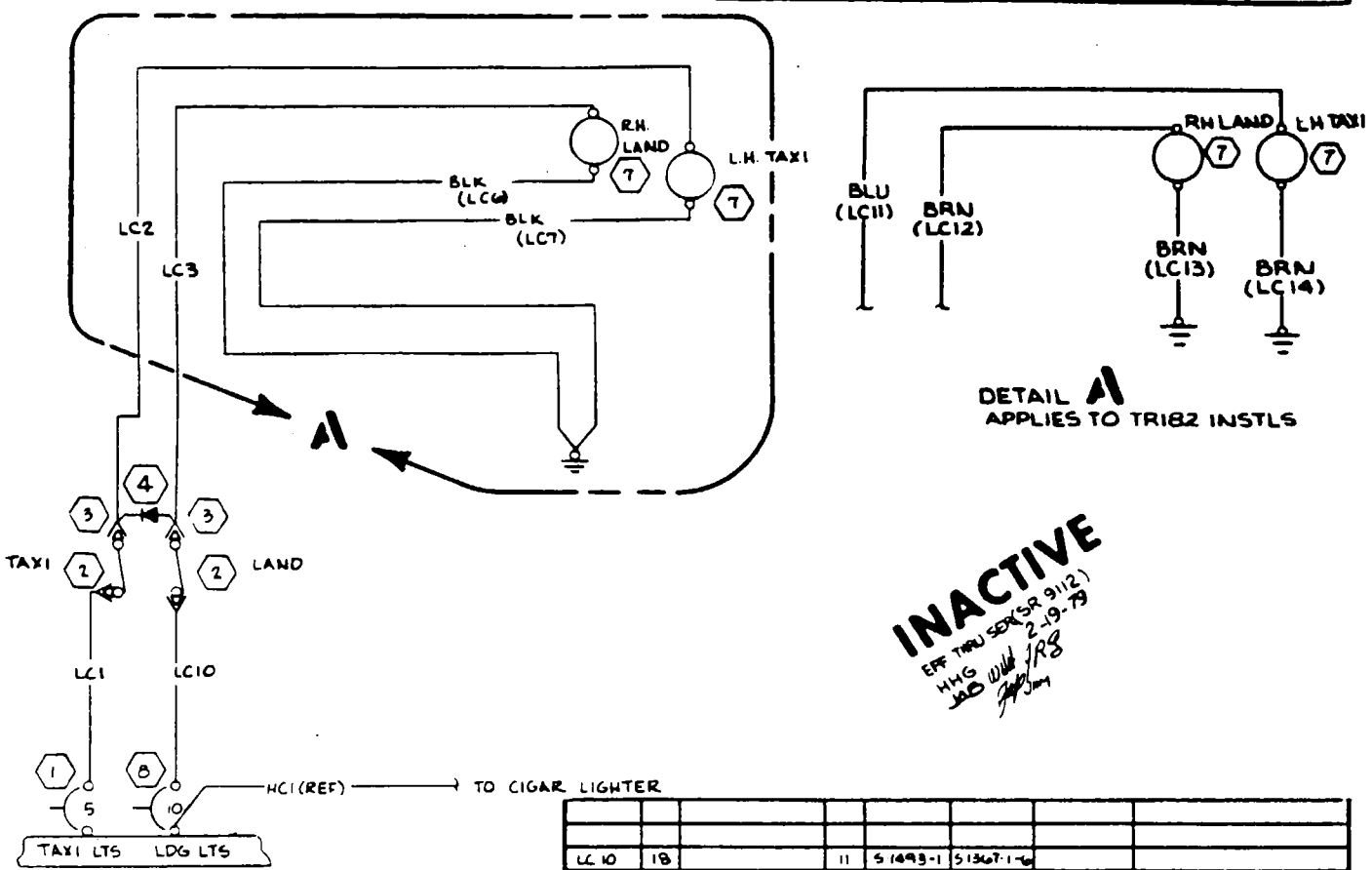

INACTIVE
EFF THRU SER (SR 9112)
HMG 2-19-79
JAB WHH JRS

WIRE CODE NO	GA	MATERIAL	LG	TERMINALS			SERIALS
LC10	18		11	S-1493-1	S-1367-1-6		
BRN (LC12)	18	1.		S-1367-1-8	S-1367-1-10		
BRN (LC13)	18	2.		S-1367-1-8	S-1367-1-10		
BLK (LC6)	18	-18-0	31	S-1367-1-12	S-1367-1-8		
BLK (LC6)	18	-18-0	50	S-1367-1-12	S-1367-1-8		
BRN (LC12)	18	1		S-1493-1	S-1367-1-8		
BLU (LC11)	18	2.		S-1493-1	S-1367-1-8		
LC5	18		57	S-1493-1	S-1367-1-8		
LC2	18		57	S-1493-1	S-1367-1-8		
LC1	18		11	S-1493-1	S-1367-1-6		

WIRE TABLE

ITEM NO	PART NO.	DESCRIPTION
8	S-1360-10L	CIRCUIT BREAKER
7	4591	LIGHT
4	1270082	DIODE ASSY
3	S 2023-1	TERM ADAPTER
2	S 2160-1	SWITCH
1	S-1360-5L	CIRCUIT BREAKER

EQUIPMENT TABLE

CES-1000 IS APPLICABLE
VENDOR CODES PER S-1400
CES-XXXX-CESSNA SPEC. NO.
S-XXX OR CMXXXX-CESSNA STD. NO.

SUPERSEDES:

SUPERSEDED BY: P 11.10

CONTRACT NO:

	NAME	DATE
DESIGN	SPENCER	3-28-77
GROUP	W. Hardin	4-13-77
DRAWN	HARVEY	3-16-77
CHECK	J. YOUEL	3-18-77
STRESS		
PROJ	H. MOORE	4-4-77
APPD	JRS	
OTHER		

Cessna. AIRCRAFT CO.
PAWNEE DIVISION
5800 E. PAWNEE
WICHITA KANSAS

TITLE
WIRING DIAGRAM — LANDING LIGHTS

SIZE	CODE IDENT. NO.	DWG NO
C	71379	2270001

SCALE NONE (SR8462) PAGE: 11 B

REVISION			
LET	DESCRIPTION	DATE	APPD
C	BY REV: SER IN LB49 LB50 & LB51 SER OUT LB21 LB23 & LB36 ADD DETAIL B & CAGE 11.9.1 (SR 0837)	RCT 9-14-84	
D	BY REV: LB52 WAS LB49 (SR 10837)	KWL 12-13-84	
A	BY REV: S-2000C201J WAS S-2000B71J (SR8368) S-2091-7 WAS -3 (SR8462 REF)	CRS 10-3-77	
B	BY REV: ADD 1513837 (3). DETAIL A (SR9112)	MDR 4-20-79	

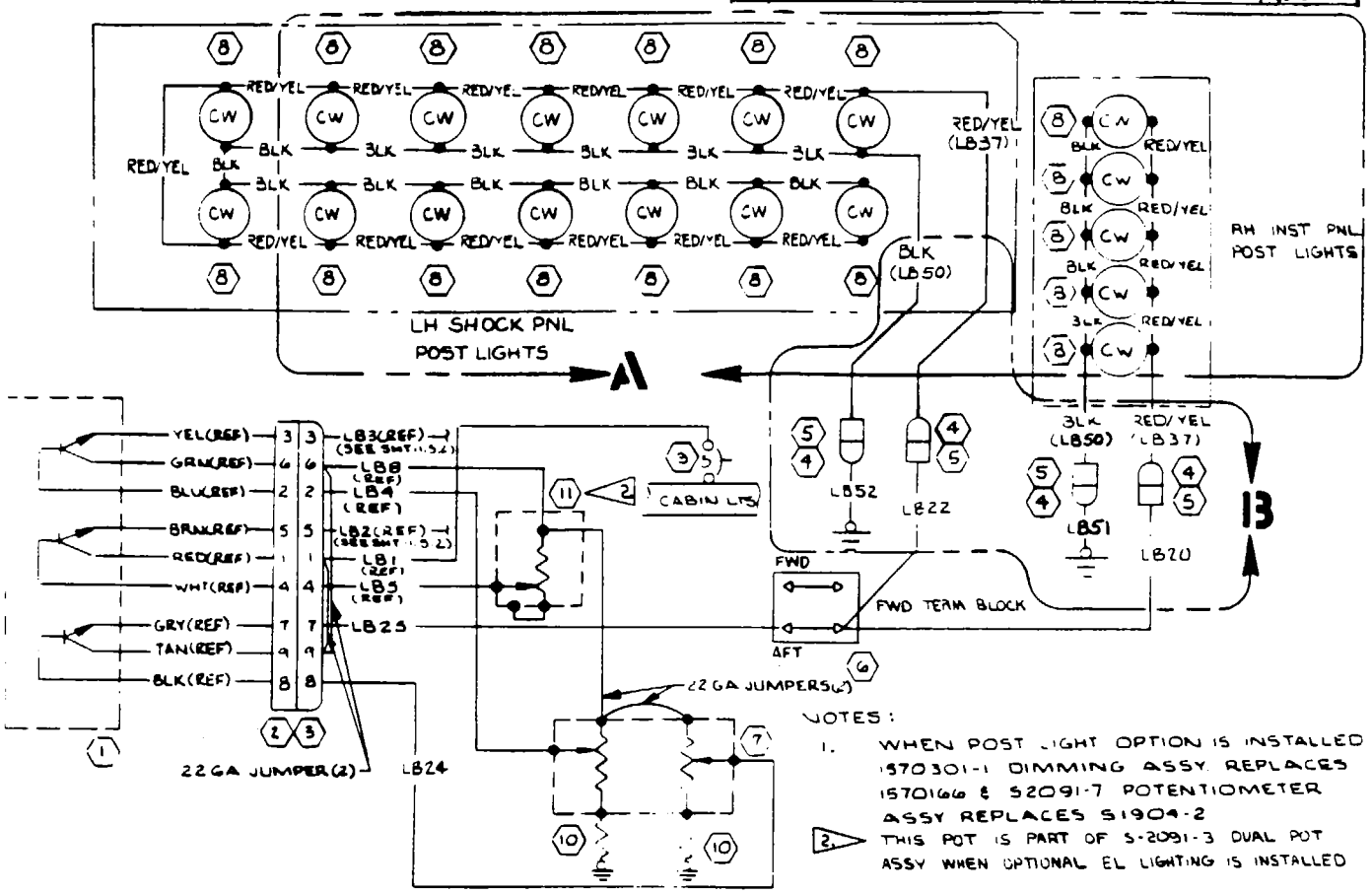

NOTES:

1. WHEN POST LIGHT OPTION IS INSTALLED 1570301-1 DIMMING ASSY REPLACES 1570166 & S2091-7 POTENTIOMETER ASSY REPLACES S1904-2
2. THIS POT IS PART OF S-2091-3 DUAL POT ASSY WHEN OPTIONAL EL LIGHTING IS INSTALLED

WIRE CODE NO	GA	MATERIAL	LG	TERMINALS		SERIALS
LB51	22			S-1635-1	S-1367-1-8	SER (SR10837) & ON
BLK (LB50)	22	-22-0		SOLDER	S-1636-1	SER (SR 0837) & ON
LB52	22			S-1635-1	S-1367-1-8	SER (SR 0837) & ON
BLK	22	-22-0		SOLDER	SOLDER	
RED/YEL		-22-2-4		SOLDER	SOLDER	
RED/YEL (LB37)		-22-2-4		S-1635-1	SOLDER	
BLK (LB36)		-22-0		SOLDER	S-1635-1	THRU SER (SR10837)
LB20				S 1829 1	S 1636-1	
LB21				S 1636-1	S 1367 1 8	THRU SER (SR10837)
LB22				S 1829-1	S 1636 1	
LB23				S-1636 1	S 1367 1-8	THRU SER (SR10837)
LB24				S 1635-1	SOLDER	
LB25	22			S 1635-1	S 1829 1	

WIRE TABLE

ITEM NO	PART NO.	DESCRIPTION
11	S-1904-2	POT ASSY
10	S-2000C201J	RESISTOR
9	S-1360 5L	CIRCUIT BREAKER
8	1513837	LIGHT ASSY
7	S 2091-7	DUAL POT ASSY
6	54002 55	TERMINAL BLOCK
5	S 1637-2	HOUSING
4	S 1637 1	HOUSING
3	S-1640 9	HOUSING
2	S 1641-9	HOUSING
1	1570301	DIMMING ASSY

EQUIPMENT TABLE

CES-1000 IS APPLICABLE
VENDOR CODES PER S-1400
CES-XXXX-CESSNA SPEC. NO.
S-XXX OR CMXXXX-CESSNA STD. NO.

SUPERSEDES:

SUPERSEDED BY:

CONTRACT NO:	NAME	DATE
DESIGN	SPENCER	3-28-77
GROUP	W. H. Harden	4-13-77
DRAWN	HARVEY	3-16-77
CHECK	J. YOUEL	3-18-77
STRESS		
PROJ	J. H. MOORE	4/4/77
APPD		
OTHER		

Cessna AIRCRAFT CO.
PAWNEE DIVISION
5800 E. PAWNEE
WICHITA, KANSAS

TITLE: WIRING DIAGRAM — POST LIGHTS (OPT)

SIZE: C | CODE IDENT NO.: 71379 | DWG NO: 2270001

SCALE: NONE | (SR8462) | PAGE: 11.9

REVISION			
LET	DESCRIPTION	DATE	APPD
C	SEE SHEET 11.9.0 FOR REVISION		

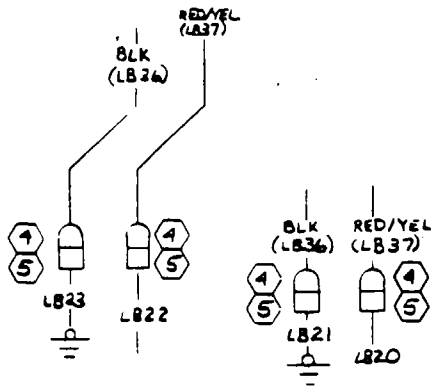

DETAIL B
THRU SER (SR10837)

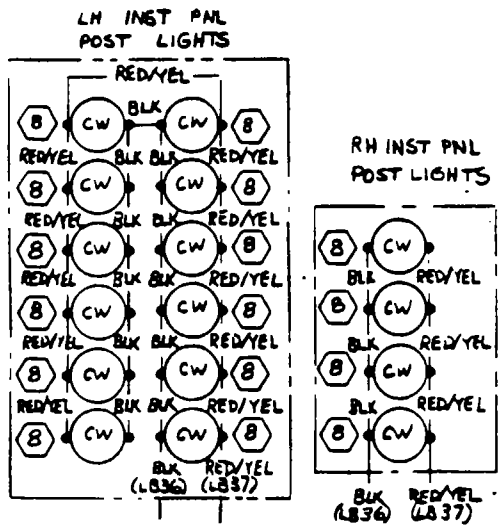

DETAIL A
THRU SER (SR9112)

WIRE CODE NO	GA	MATERIAL	LG	TERMINALS			SERIALS

WIRE TABLE

PART NO	DESCRIPTION	
EQUIPMENT TABLE		

CES-1000 IS APPLICABLE
VENDOR CODES PER S-1400
CES-XXXX=CESSNA SPEC. NO.
S-XXX OR CMXXXX=CESSNA STD. NO.

SUPERSEDES

SUPERSEDED BY:

CONTRACT NO:

	NAME	DATE
DESIGN	RC Tacke	9-14-84
GROUP		
DRAWN	TACKE	9-14-84
CHECK	McGuigan	9-14-84
STRESS		
PROJ	J Tanffel	9-19-84
APPD		
OTHER		

Cessna AIRCRAFT CO.
PAWNEE DIVISION
5800 E PAWNEE
WICHITA KANSAS

TITLE
WIRING DIAGRAM — POST LIGHTS (OPT)

SIZE	CODE IDENT NO	DWG NO
C	71379	2270001

SCALE NONE (SR10837) PAGE: 11.9.1

REVISION			
LET	DESCRIPTION	DATE	APPD
A	BY REV: HC4(REF) WAS HC1(REF) TO BUS BAR LDG LTS CKT BKR; ADD DA5(REF) & PA19(REF) (SR9632)	RAO 3-14-80	RCH DH LWF

NOTES:

1. MATERIAL IS ALPHA 5857-7 (VENDOR CODE 92194) OR BELDEN 83009-1 (VENDOR CODE 70903)
2. MATERIAL IS ALPHA 5857-6 (VENDOR CODE 92194) OR BELDEN 83009-6 (VENDOR CODE 70903)

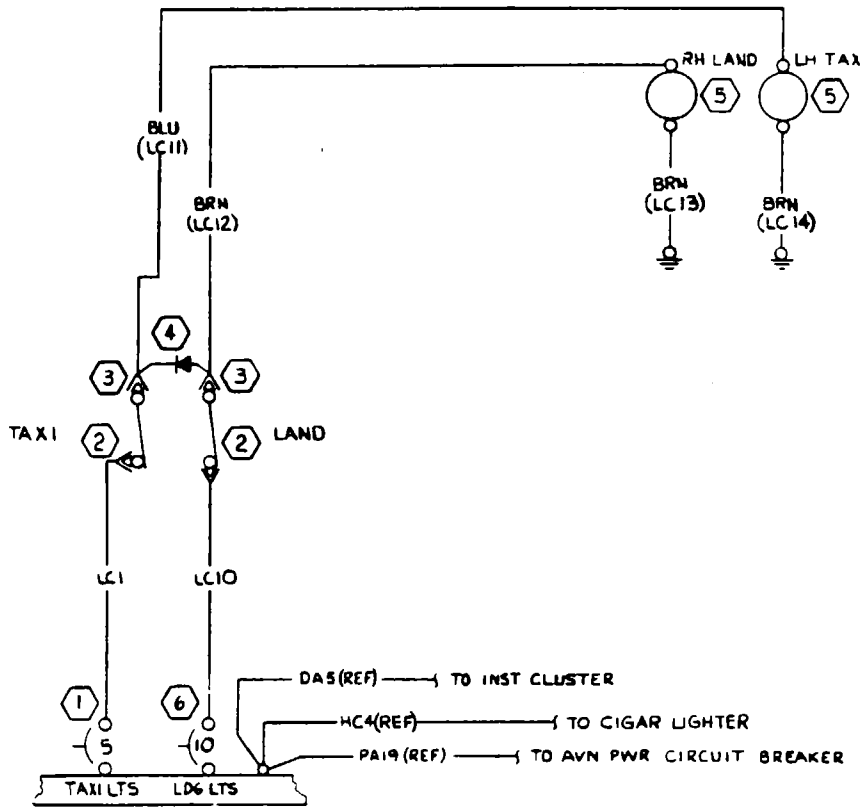

32-0916

WIRE CODE NO.	GA	MATERIAL	LG	TERMINALS			SERIALS
BRN(LC14)	18	1		S-1367-1-8	S-1367-1-0		
BRN(LC13)		2		S-1367-1-8	S-1367-1-0		
BRN(LC12)		1		S-1493-1	S-1367-1-3		
BLU(LC11)		2		S-1493-1	S-1367-1-3		
LC10			11	S-1493-1	S-1367-1-6		
LC1	18		11	S-1493-1	S-1367-1-6		

WIRE TABLE

ITEM NO.	PART NO.	DESCRIPTION
6	S-1360-10L	CIRCUIT BREAKER
5	4531	LIGHT
4	1270082	DIODE ASSY
3	S-2023-1	TERM. ADAPTER
2	S-2160-1	SWITCH
1	S-1360-5L	CIRCUIT BREAKER

EQUIPMENT TABLE

CES-1000 IS APPLICABLE
VENDOR CODES PER S-1400
CES-XXXX-CESSNA SPEC. NO.
S-XXX OR CMXXXX-CESSNA STD. NO.

SUPERSEDES: P.11.8

SUPERSEDED BY:

CONTRACT NO:

	NAME	DATE
DESIGN	SPENCER	2-27-79
GROUP	D. Hardin	3-5-79
DRAWN	H. GHAZARIAN	2-9-79
CHECK	BORLESKE	2-20-79
STRESS		
PROJ	L. MOORE	3-6-79
APPD		
OTHER		

Cessna AIRCRAFT CO. PAWNEE DIVISION 5800 E. PAWNEE WICHITA, KANSAS

TITLE: WIRING DIAGRAM — LANDING LIGHTS

SIZE	CODE IDENT. NO.	DWG NO
C	71379	2270001

SCALE: NONE (SR9112) PAGE: 11.0

REVISION			
LET	DESCRIPTION	DATE	APPD
A	BY REV: BLK(LH4) WAS S-1367-1-4 U-LH3. ADD BLK(U-LH4) (MER R182E0776)	MDR 5-22-79	

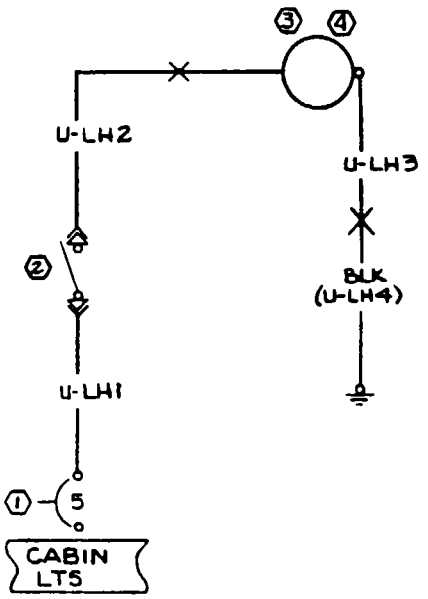

WIRE CODE NO	GA	MATERIAL	LG	TERMINALS			SERIALS
BLK (U-LH4)	22	-22-0		S-1367-1-8	S-1370-1		
U-LH3	22			S-1367-1-4	SEE BLK(LH4)		
U-LH2	22			S-1493-1	S-1370-1		
U-LH1	22			S-1367-1-6	S-1493-1		

WIRE TABLE

TERM NO	PART NO.	DESCRIPTION	VENDOR
4	M$25338-7079	LAMP	
3	=11-225	LAMPHOLDER	95263
2	S-2160-3	SWITCH	
1	S-1360-5L	CIRCUIT BREAKER	

EQUIPMENT TABLE

CES-1000 IS APPLICABLE
VENDOR CODES PER S-1400
CES-XXXX=CESSNA SPEC. NO.
S-XXX OR CMXXXX=CESSNA STD. NO.

SUPERSEDES
SUPERSEDED BY:

CONTRACT NO:

	NAME	DATE
DESIGN	SPENCER	2-27-79
GROUP	W. Harden	3-3-79
DRAWN	P MAYFIELD	2-19-79
CHECK	YOUNGERS	2-20-79
STRESS		
PROJ	L H MOORE	3-6-79
APPD	JPG	
OTHER		

Cessna AIRCRAFT CO.
PAWNEE DIVISION
5800 E. PAWNEE
WICHITA, KANSAS

TITLE
WIRING DIAGRAM — ICE DETECTOR LIGHT (OPT)

SIZE C | CODE IDENT NO. 71379 | DWG NO 2270001

SCALE NONE | (SR 9112) | PAGE: 11.11

REVISION			
LET	DESCRIPTION	DATE	APPD
A	BY REV: RCF 5130B WAS RCF 5140 COIL CORD MATERIAL (SR10003)	GLS 4-30-81	
B	BY REV ADD CD32 (REF) (SR9951)	MKT 7-14-81	

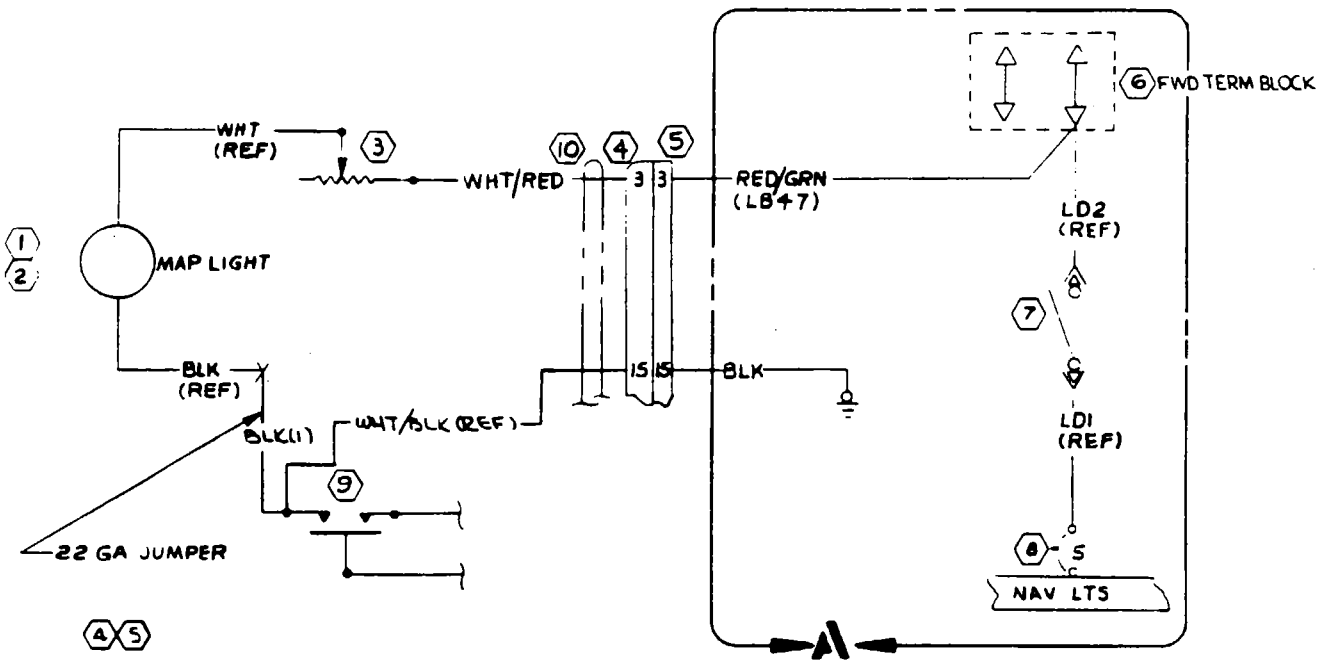

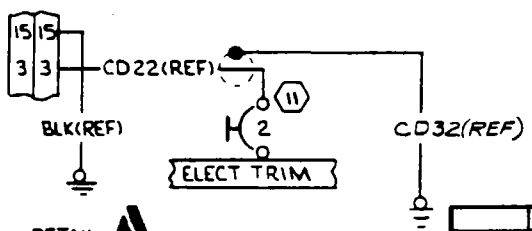

DETAIL A
(APPLIES WHEN ELECTRIC TRIM IS INSTALLED)

INACTIVE EFF THRU SER (SR10713) THIS 7-8-93

S1-00916

WIRE CODE NO	GA	MATERIAL	LG	TERMINALS			SERIALS
BLK(1)	22	-22-0		SOLDER	S-1330-0		
BLK	22	-22-0		S-1963-2	S-1367-1-8		
RED/GRN (LB47)	22	-22-2-5		S-1963-2	S-1829-1		
WHT/RED	24	RCF 5130B		SOLDER	S-1963-1		

WIRE TABLE

PART NO.	DESCRIPTION	
11 S-1232-2	CIRCUIT BREAKER	
10 2270030	CABLE ASSY	
9 S-1985-1	MIKE SWITCH	
8 S-1360-5L	CIRCUIT BREAKER	
7 S-2160-1	SWITCH	
6 34002-55	TERMINAL BLOCK	
5 S-1982-2-0	HOUSING	
4 S-1962-1-0	HOUSING	
3 3959A161-152A	RHEOSTAT	
2 24RB	LAMP	
1 4157-001	SOCKET	

ITEM NO — EQUIPMENT TABLE

CES-1000 IS APPLICABLE
VENDOR CODES PER S-1400
CES-XXXX-CESSNA SPEC. NO.
S-XXX OR CMXXXX-CESSNA STD. NO.

SUPERSEDES: 2270001 PAGE 11.6

SUPERSEDED BY: PG. 11.13

CONTRACT NO:

	NAME	DATE
DESIGN		5-22-80
GROUP		5-30-80
DRAWN	M MARRIOTT	5-19-80
CHECK	BORLESKE	5-19-80
STRESS		
PROJ	FICKEL	7-25-80
APPD		
OTHER	LWF	

Cessna. AIRCRAFT CO.
PAWNEE DIVISION
5800 E PAWNEE
WICHITA, KANSAS

TITLE
WIRING DIAGRAM — MAP LIGHT CONTROL WHEEL

SIZE	CODE IDENT NO	DWG NO
C	71379	2270001

SCALE: NONE | SR9632 | 11.12

NOTES:

1. MATERIAL IS RCF5130B COIL CORD, VENDOR CODE (096906)
2. NOT REQUIRED WHEN INSTALLED WITH OPT ELECTRIC TRIM. REFER TO PG. 14.6.0

REVISION			
LET	DESCRIPTION	DATE	APPD

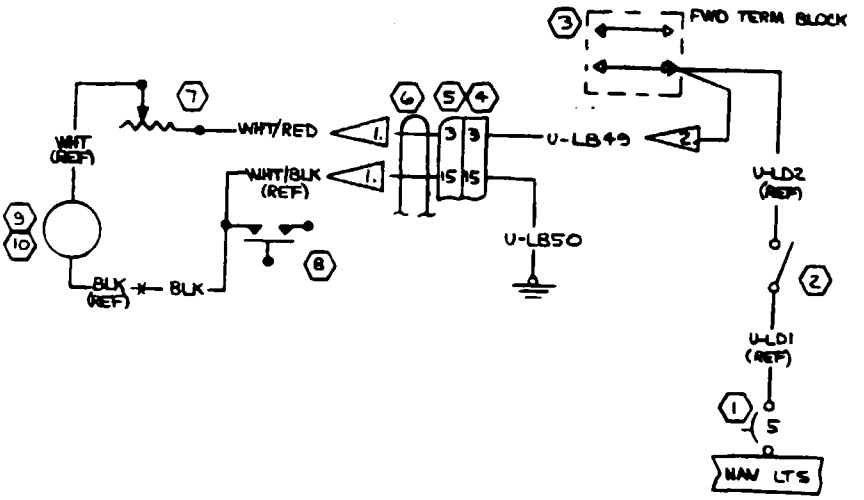

WIRE CODE NO	GA	MATERIAL	LG	TERMINALS		SERIALS
U-LB50	22			S-2099-9	S-1367-1-8	
U-LB49	22			S-2099-9	S-1829-1	
BLK	22			S-1370-1	SOLDER	
WHT/RED	24	1.		SOLDER	S-2353-2	

WIRE TABLE

ITEM NO	PART NO	DESCRIPTION	
10	4157-001	SOCKET	
9	24RB	LAMP	
8	S-1195-1	MIKE SWITCH	
7	3959A161-152A	RHEOSTAT	
6	2270030	CABLE ASSY	
5	S-2350-3	HOUSING	
4	S-2349-1	HOUSING	
3	34002-55	TERMINAL BLOCK	
2	S-2160-1	SWITCH	
1	S-1360-5L	CIRCUIT BREAKER	

EQUIPMENT TABLE

CES-1000 IS APPLICABLE
VENDOR CODES PER S-1400
CES-XXXX-CESSNA SPEC. NO.
S-XXX OR CMXXXX-CESSNA STD. NO.

SUPERSEDES: PG. 11.12

SUPERSEDED BY:

CONTRACT NO:

	NAME	DATE
DESIGN	SPENCER	9-8-83
GROUP	W. Hardin	9-21-83
DRAWN	SPENCER	9-9-83
CHECK	R E HAIR	9-12-83
STRESS		
PROJ	J. R. Smith	10-3-83
APPD		
OTHER		

Cessna. AIRCRAFT CO.
PAWNEE DIVISION
5800 E. PAWNEE
WICHITA, KANSAS

TITLE: WIRING DIAGRAM — MAP LIGHT - CONTROL WHEEL

SIZE	CODE IDENT NO	DWG NO
C	71379	2270001

SCALE: NONE | (SR 3713) | PAGE: 11.2

REVISION			
LET	DESCRIPTION	DATE	APPD
F	BY REV: ADD DETAIL "E" & S1232-35, PG 12.1.2 (SR9632)(REF)(SR10122)	GW 2-13-81	JAB
G	BY REV: ADD DETAIL "F" & GA11 WIRE (SR10254)	WHH 10-17-81	JAB

REVISION			
LET	DESCRIPTION	DATE	APPD
A	BY REV: GA5 WAS 22 GA; ADD PA9 (REF); TERM. 3 WAS 2 & TERM. 2 WAS 3/MS-25041-4 & VM920M-3; ADD DETAIL A & B PG 12.1.1; YZ-2RNTT WAS X65038-YZ (SR8462)(REF)(SR8995)(SR8782)	DLP 2-18-78 CRS	JAB
B	BY REV: ADD NOTE 6, DETAIL C & SER (SR9183)	RLY 9-14-78	
C	BY REV: ADD H11-1287 (SR9112)	NTL 7-12-79	
D	BY REV: ADD DETAIL "D", GA7, GA8 & 9880710 (SR9738)	NTL 12-19-79	JAB
E	REACTIVATE DRAWING BY REV: S-1367-1-10 WAS S-1367-1-12/GA8 (NOW SHOP PRACT) 9881141 WAS 9881120-1 (SR9828)	DFS MKM 7-8-80	JAB

NOTES:

1. SYSTEM SHOWN WITH LDG GEAR DOWN & LOCKED, ACFT ON GROUND & POWER OFF
2. PRESSURE SWITCH OPENS WHEN GEAR IS UP AND HYDRAULIC PRESSURE BUILDS UP TO PROPER LEVEL
3. INSTALL 1270717 DIODE ASSY WITH MARKING BAND ON DIODE TO POSITIVE TERMINAL ON PUMP MOTOR
4. TERMINATE VENDOR LEAD WITH S-1367-1-10
5. TERMINATE VENDOR LEAD WITH S-1636-1
6. TERMINATE VENDOR LEAD WITH S-1635-1
7. USE S-1694-S-0.8 SHRINKABLE TUBING OVER S-1830-1 TERMINAL

INACTIVE
THRU SER (SR10099)
REV 1-28-82
JAB

WIRE CODE NO	GA	MATERIAL	LG	TERMINALS			SERIALS
GA11	10	S1562-10-9		S1367-3-12	S1367-3-10		SER (SR10254) & ON
GA10	10	S1562-10-9		S1367-3-13	S1367-3-12		SER (SR10122) & ON
GA9	10	S1562-10-9		S1367-3-8	S1367-3-13		SER (SR10122) & ON
~~GA8~~	22	-22-6-4		S1367-1-10	S1830-1	7.	SER (SR9738) & ON
~~GA7~~	22	-22-6-4		S1636-1	S1830-1	7.	SER (SR9738) & ON
GD15	22			S1636-1	S1367-2-6		SER (SR9183) & ON
GD14	22			S1636-1	S1636-1		SER (SR9183) & ON
GD13	22			S1370-1	S1636-1		SER (SR9183) & ON
GD12	22			SEE GD4	S1635-1		SER (SR8995) & ON
GD11	22			S1636-1	S1367-1-6		↕
GD10	22			S1367-1-6	S1636-1		
GD9	22			S1635-1	S1637-1-6		SER (SR8995) & ON
GA1	12		17	S1367-3-8	S1367-3-13		THRU SER (SR10122)
GA2	12		6	S1367-3-13	S1367-3-10		THRU SER (SR8782)
GA3	22		95	S1367-1-6	S1635-1		
GA4	22		103	S1635-1	S1635-1		
GA6	12			S1367-3-13	S1367-1-12		SER (SR8782) THRU (SR10122)
GA5	12		6	S1367-3-10	S1367-3-10		THRU SER (SR8782)
GD1	22		203	S1367-1-6	SEE GD4		THRU SER (SR8995)
GD2	↕		12	↕	S1367-1-6		
GD3			224		S1367-1-6		THRU SER (SR8995)
GD4			203		S1367-2-6		THRU SER (SR9183)
GD5			53	S1367-1-6	S1367-1-6		THRU SER (SR9183)
GD6			830	S1370-1	S1367-1-6		THRU SER (SR9183)
GD7			100	S1370-1	SOLDER		
GD8			85	S1367-1-6	↕		
GE1			8	S1367-1-6	↕		
GE2			4	SOLDER	SOLDER		
GE3	↕		8	SOLDER	S1367-1-8		
GE4	22		8	SOLDER	S1367-1-8		

WIRE TABLE

17	S-1232-35	CIRCUIT BREAKER	
16	9880710	PRESSURE SWITCH	2
15	9881141	MOTOR ASSY	
14	602EM67-6B	SWITCH	
13	1270717	DIODE ASSY	
12	S-1577-1	SWITCH	
11	YZ-2RNTT	SWITCH	
10	VM920M-3	LIGHT	
9	MS-25041-4	LIGHT ASSY	
8	S-1360-5L	CIRCUIT BREAKER	
7	S-1637-1	HOUSING	
6	S-1637-2	HOUSING	
5	H11-1287	SWITCH	(ALT)
4	S-2088-1	SWITCH	
3	9880700	HYD PRESS SWITCH	2
2	S-1232-30	CIRCUIT BREAKER	
1	S-1577-1	PWR PACK CONTACTOR	
ITEM NO	PART NO.	DESCRIPTION	

EQUIPMENT TABLE

CONTRACT NO:

	NAME	DATE
DESIGN	SPENCER	3-28-77
GROUP	W.H. Hardin	4-12-77
DRAWN	HARVEY	3-16-77
CHECK	J. YOUEL	3-18-77
STRESS		
PROJ	J.H. MOORE	4-12-77
APPD		
OTHER		

Cessna. AIRCRAFT CO.
PAWNEE DIVISION
5800 E. PAWNEE
WICHITA, KANSAS

TITLE: WIRING DIAGRAM — LANDING GEAR SYSTEM

SIZE: C | CODE IDENT. NO.: 71379 | DWG NO: 2270001

SCALE: NONE | (SR8462) | PAGE: 12.1.0

CES-1000 IS APPLICABLE
VENDOR CODES PER S-1400
CES-XXXX-CESSNA SPEC. NO.
S-XXX OR CMXXXX-CESSNA
STD NO.

SUPERSEDES

SUPERSEDED BY: PG 12.3.0 & 12.3.1

REVISION			
LET	DESCRIPTION	DATE	APPD
G	SEE P 2.1.0 FOR REVISION		

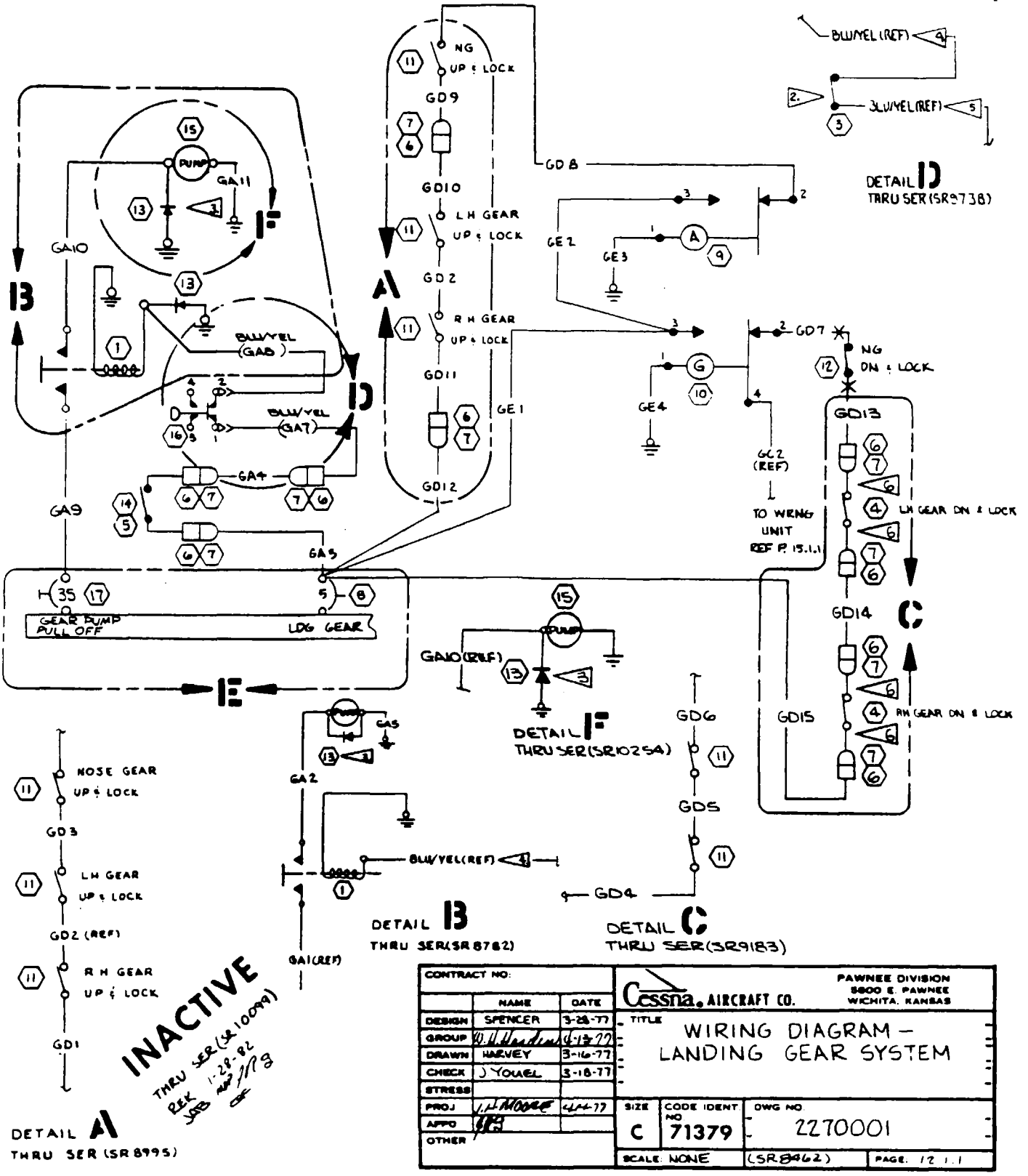

CONTRACT NO:	NAME	DATE
DESIGN	SPENCER	3-28-77
GROUP	W. H. Hendricks	4-13-77
DRAWN	HARVEY	3-16-77
CHECK	J YOUEL	3-18-77
STRESS		
PROJ	J. H. Moore	4-4-77
APPD		
OTHER		

Cessna AIRCRAFT CO. PAWNEE DIVISION 5800 E. PAWNEE WICHITA, KANSAS

TITLE: WIRING DIAGRAM — LANDING GEAR SYSTEM

SIZE	CODE IDENT NO	DWG NO
C	71379	2270001

SCALE: NONE (SR8462) PAGE: 12.1.1

REVISION			
LET	DESCRIPTION	DATE	APPD
F	SEE PAGE 12.1.0 FOR REVISION		

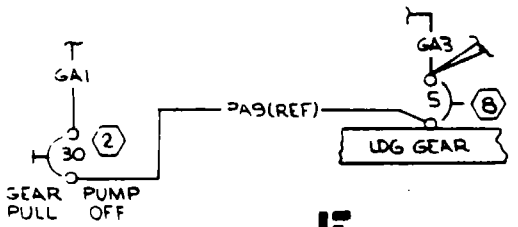

DETAIL E
THRU SER(SR9632)

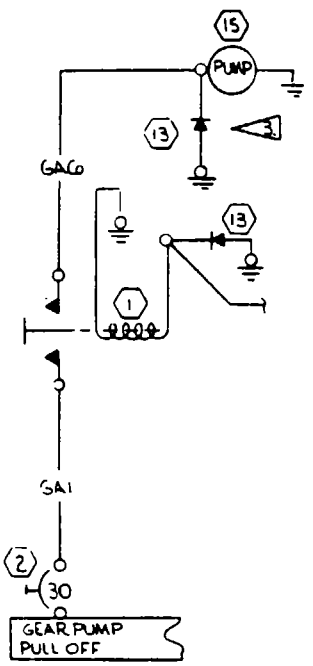

DETAIL E
SER(SR9632) THRU SER(SR10122)

INACTIVE
THRU SER(SR10099)
REX 1-28-82
JAB MOD 1192

CONTRACT NO			Cessna AIRCRAFT CO.	PAWNEE DIVISION 5800 E PAWNEE WICHITA KANSAS	
	NAME	DATE	TITLE WIRING DIAGRAM— LANDING GEAR SYSTEM		
DESIGN					
GROUP		3-2-81			
DRAWN	WATSON	2-13-81			
CHECK	BOPLESKE	2-17-81			
STRESS					
PROJ		3-3-81	SIZE C	CODE IDENT NO 71379	DWG NO 2270001
APPD		3-3-81			
OTHER			SCALE NONE	SR(10122)	PAGE 12.1.2

REVISION			
LET	DESCRIPTION	DATE	APPD
A	BY REV: ADDED CONNECTOR TO GEAR UP LOCK SWITCHES & CHG TERMINALS ON GD27, GD28, GD29 & GD33 WIRES TO AGREE. ADD GD35, GD36, GD37 & GD38 WIRES (SR10099)	WWH 7-15-82	RJ WWH 7/19 CSP

NOTES:

1. SYSTEM SHOWN WITH ACFT ON GROUND, GEAR DOWN & LOCKED, HYDRAULIC SYSTEM PRESSURIZED, POWER OFF.
2. TERMINATE VENDOR LEADS WITH S-1635-1 TERMINALS.
3. INSTALL S-1694-5-0.8 SHRINKABLE TUBING OVER S-1830-1 TERMINAL.
4. INSTALL 1270717 DIODE ASSY WITH MARKING BAND TO POSITIVE TERMINAL ON PUMP MOTOR.

99-00916

WIRE CODE NO	GA	MATERIAL	LG	TERMINALS			SERIALS
GD38	22			S1635-1	SEE GD30		
GD37	22			S1635-1	SEE GD30		
GD36	22			S1635-1	S1367-1-6		
GD35	22			S1635-1	S1367-1-6		
GA11	10	S-1562-10-9		S-1367-3-11	S-1367-3-10		
GD34	22			SEE GD27	SEE GD28		
GD33				S1636-1	SOLDER		
GD32				SEE GD26	SEE GD27		
GD31				S1367-1-6	SOLDER		
GD30				S1367-1-6	S1367-1-6		
GD29				S1367-1-6	S1636-1		
GD28				S1636-1	S1636-1		
GD27				S1636-1	S1636-1		
GD26				S1636-1	S1367-1-6		
GD25				S1636-1	SOLDER		
GD24				S1636-1	S1636-1		
GD23				S1636-1	S1636-1		
GD22				S1367-1-6	S1636-1		
GD21				S1493-1	SOLDER		
GD20				S1636-1	S1367-1-10		
[illegible]		-22-6-4		S1635-1	S1830-1	3	
[illegible]		-22-6-4		S1635-1	S1830-1	3	
GD17				S1636-1	S1636-1		
GD16	22			S1367-1-6	S1636-1		
GA10	10	S-1562-10-9		S1367-3-13	S1367-3-12		
GA9	10	S-1562-10-9		S1367-3-8	S1367-3-13		
GE8	22			S1367-1-8	SOLDER		
GE7				SOLDER	SOLDER		
GE6				SOLDER	SOLDER		
GE5	22			S1367-1-6	SOLDER		

WIRE TABLE

21	S-1640-6	HOUSING	
20	S-1641-6	HOUSING	
19	MS25237-327	LAMP	
18	9881141	MOTOR ASSY	
17	1270717-	DIODE ASSY	
16	S-1577-1	CONTACTOR	
15	1570043-	DIODE ASSY	
14	MS25041-2	LIGHT ASSY	
13	VM920M-3	LIGHT ASSY	
12	S-2586-1	SWITCH	
11	S-1638-1	HOUSING	
10	S-1638-2	HOUSING	
9	S-2088-3	SWITCH	
8	S-1377-2	SWITCH	
7	9880710	PRESSURE SWITCH	
6	S-2035-2	HOUSING	
5	S-2035-1	HOUSING	
4	H11-1287	SWITCH (ALT)	
3	602EN67-68	SWITCH	
2	S-1232-35	CIRCUIT BREAKER	
1	S-1360-5L	CIRCUIT BREAKER	
ITEM NO	PART NO.	DESCRIPTION	

EQUIPMENT TABLE

CESS-1000 IS APPLICABLE
VENDOR CODES PER S-1400
CESS-XXXX=CESSNA SPEC. NO.
S-XXX OR CNXXXX=CESSNA STD. NO.

SUPERSEDES: PG. 12.1.0, 12.1.1 & 12.1.2

SUPERSEDED BY:

CONTRACT NO:

	NAME	DATE
DESIGN	R. KLEIN	1-29-82
GROUP	N. PAINE	2-4-82
DRAWN	R. KLEIN	1-29-82
CHECK	BORLESKE	2-3-82
STRESS		
PROJ	[illegible]	2-4-82
APPD	CSP	
OTHER		

Cessna AIRCRAFT CO.
PAWNEE DIVISION
3800 E. PAWNEE
WICHITA, KANSAS

TITLE
WIRING DIAGRAM — LANDING GEAR SYSTEM

SIZE	CODE IDENT. NO.	DWG NO
C	71379	2270001

SCALE NONE (SR10099) PAGE: 12.3.0

REVISION			
LET	DESCRIPTION	DATE	APPD
A	SEE REVISIONS ON SHEET 1		

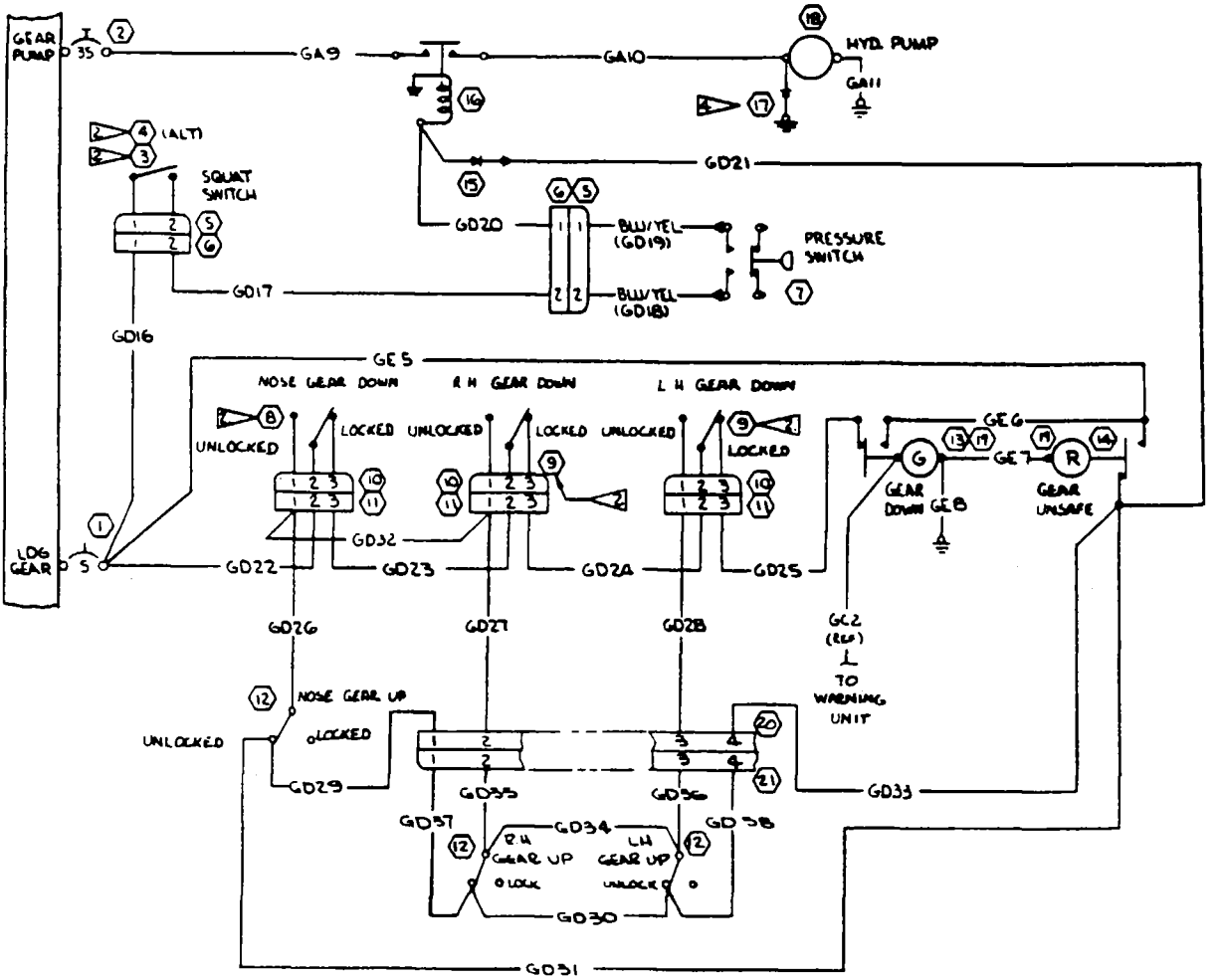

CONTRACT NO	NAME	DATE
DESIGN	R KLEIN	1-29-82
GROUP	M PAINE	2-4-82
DRAWN	WHITSON	1-29-82
CHECK	BORLESKE	2-3-82
STRESS		
PROJ		2-4-82
APPD		
OTHER		

Cessna AIRCRAFT CO. PAWNEE DIVISION 5800 E. PAWNEE WICHITA KANSAS

TITLE WIRING DIAGRAM— LANDING GEAR SYSTEM

SIZE	CODE IDENT. NO	DWG NO
C	71379	2270001

SCALE NONE (SR10099) PAGE 12 3.1

REVISION			
LET	DESCRIPTION	DATE	APPD
A	BY REV: S-2374-7.5 WAS HHH-A, S-2375-7.5 WAS SFE-7.5 (S-1000 CHG) ADD 6 MAX/HC1	CS 10-4-79	
B	BY REV ADD DETAIL "A", HC4, DAS(REF), PA19(REF) & SER (SR9632)	RAO 3-14-80	

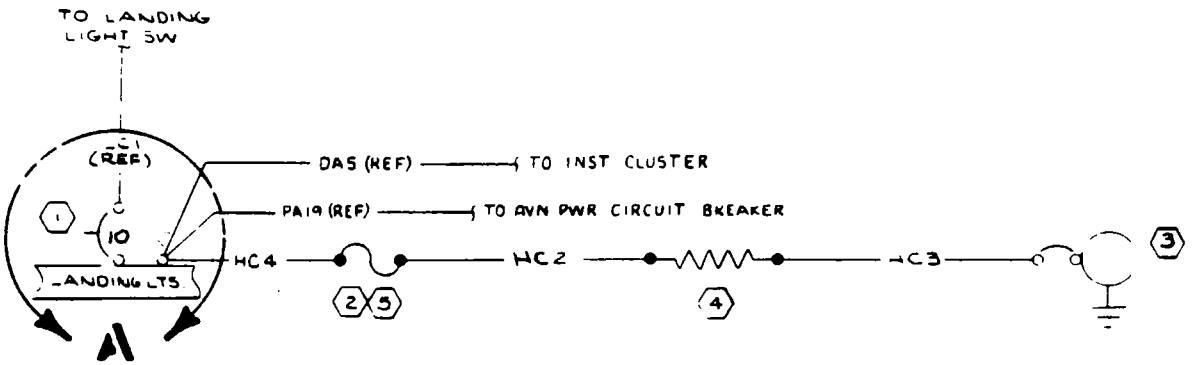

INACTIVE
THRU SER (SR10068)
GW 1-12-81
JAB

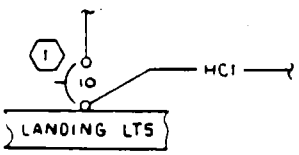

DETAIL A
THRU SER (SR9632)

WIRE CODE NO	GA	MATERIAL	LG	TERMINALS			SERIALS
HC4	18			S-1367-1-10	SOLDER		SER (SR9632) & ON
HC3	18			SOLDER	S-1367-1-6		
HC2	18			SOLDER	SOLDER		
HC1	18		6 MAX	S-1367-1-6	SOLDER		THRU SER (SR9632)

WIRE TABLE

ITEM NO	PART NO.	DESCRIPTION	
5	S-2374-7.5	FUSEHOLDER	
4	S 2041-50-16	RESISTOR	
3	0513032	CIGAR LIGHTER ASSY	
2	S-2375-7.5	FUSE	
1	S-1360-10L	CIRCUIT BREAKER	

EQUIPMENT TABLE

CES-1000 IS APPLICABLE
VENDOR CODES PER S-1400
CES-XXXX-CESSNA SPEC. NO.
S-XXX OR CMXXXX-CESSNA STD. NO.

SUPERSEDES:

SUPERSEDED BY:

CONTRACT NO:

	NAME	DATE
DESIGN	SPENCER	3-28-77
GROUP	W. H. Dunlap	4-13-77
DRAWN	HARVEY	3-16-77
CHECK	J. YOUEL	5-18-77
STRESS		
PROJ	J H MOORE	4-14-77
APPD		
OTHER		

Cessna. AIRCRAFT CO.
PAWNEE DIVISION
5800 E. PAWNEE
WICHITA, KANSAS

TITLE
WIRING DIAGRAM — CIGAR LIGHTER

SIZE C | CODE IDENT NO. 71379 | DWG NO 2270001

SCALE: NONE | R182 | PAGE: 13 1

(SR8462)

REVISION			
LET	DESCRIPTION	DATE	APPD
A	BY REV: 0511062 WAS S-1672-2 (SR8462)(REF)	DLP 10-18-77	
B	BY REV: ADD DETAIL "A". (SR 9112)	PSM 2-18-79	

NOTES:

1. ONLY HEATER CIRCUIT SHOWN, FOR STALL WARNING CIRCUIT SEE PAGE 15.1.0

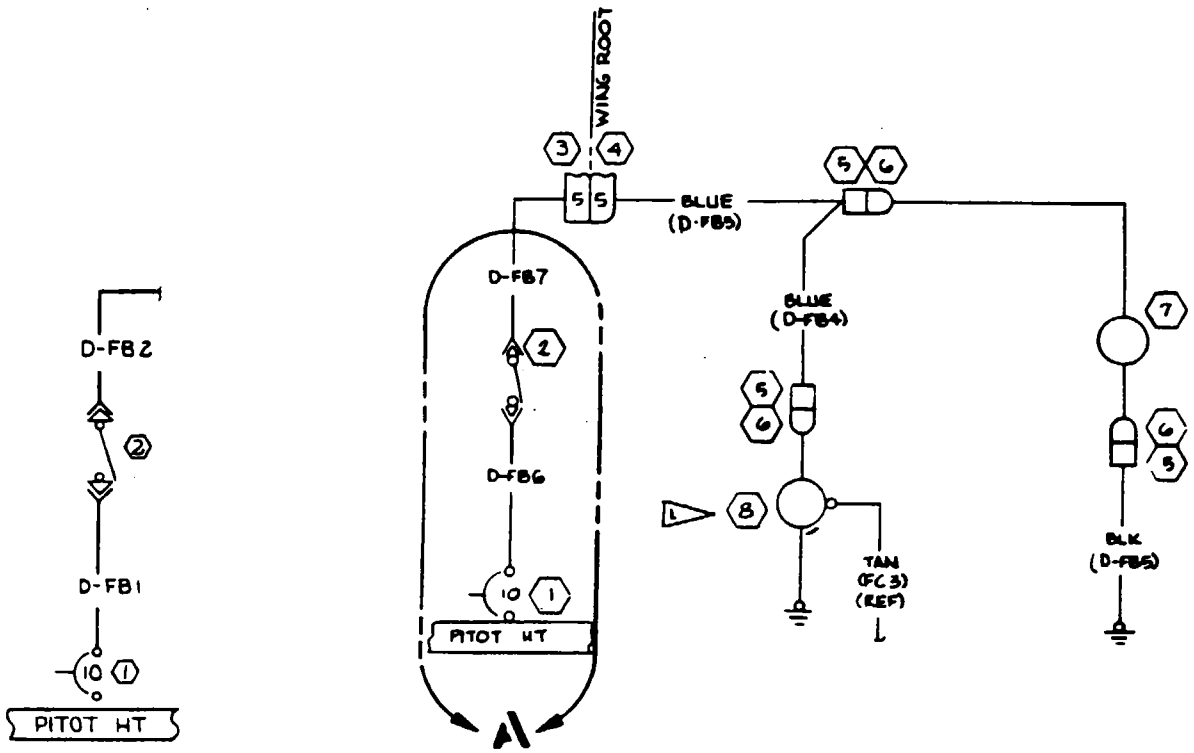

DETAIL A
EFF THRU SER (SR 9112)

WIRE CODE NO	GA	MATERIAL	LG	TERMINALS			SERIALS
U-FB 7	18			S-1493-1	S-1636-1	(STD)	
U-FB 6	18			S-1367-6	S-1493-1		
BLK (FB 5)	18	-18-0		S-1636-1	S-1367-18		
BLU (FB 4)	↓	-18-6		SEE FB5	S-1636-1	(STD)	
BLU (FB 5)	↓	-18-6		S-1636-1	S-1636-2	(STD)	
FB 2	↑			S-1493-1	S-1636-1	(STD)	
FB 1	18			S-1367-16	S-1493-1		

WIRE TABLE

ITEM NO	PART NO.	DESCRIPTION
8	0511062	STALL DETECTOR HTD
7	0721105	PITOT TUBE HTD
6	S-1637-1	HOUSING
5	S-1637-2	HOUSING
4	S-1640-6	HOUSING
3	S-1641-6	HOUSING
2	S-2160-1	SWITCH
1	S-1360-10L	CIRCUIT BREAKER

EQUIPMENT TABLE

CES-1000 IS APPLICABLE
VENDOR CODES PER S-1400
CES-XXXX=CESSNA SPEC. NO.
S-XXX OR CMXXXX=CESSNA STD. NO.

SUPERSEDES:

SUPERSEDED BY:

CONTRACT NO:

	NAME	DATE
DESIGN	SPENCER	3-28-77
GROUP	D. Hendrickson	4-13-77
DRAWN	HARVEY	3-16-77
CHECK	J. YOUEL	3-18-77
STRESS		
PROJ	J. MOORE	4-14-77
APPD		
OTHER		

Cessna AIRCRAFT CO.
PAWNEE DIVISION
5800 E. PAWNEE
WICHITA, KANSAS

TITLE
WIRING DIAGRAM — HEATED PITOT TUBE & HEATED STALL WARNING (OPT)

SIZE	CODE IDENT. NO.	DWG NO
C	71379	2270001

SCALE NONE (SR 8462) PAGE: 13.2

REVISION			
LET	DESCRIPTION	DATE	APPD
A	BY REV. CORRECT WIRE CODE NO ON DWG. TO AGREE WITH WIRE TABLE ADD S-1637-2, S-1637-1; BLK(HD3) WAS (HD3), BLK(HD4) WAS (HD4); ADD(HD18) (HD19) (SR 9112)	WAG HHG 5-22-79	ESF AC UHF JRB
B	BY REV: SER IN HA32, RED HA33, BLK HA34, HA35 & HA36 WIRES; SER OUT HD2, BLK(HD3), HD5, HD6 & RED(HD18) WIRES (SR9951)	JLS 2/9/81	UHF JRB UHF
C	BY REV: S-2035-1 WAS S-1637-1 & S-2035-2 WAS S-1637-2; ADD DETAIL "A" NOW SHOP PRACTICE (SR9951)	MKT 7-14-81	AB JRB UHF

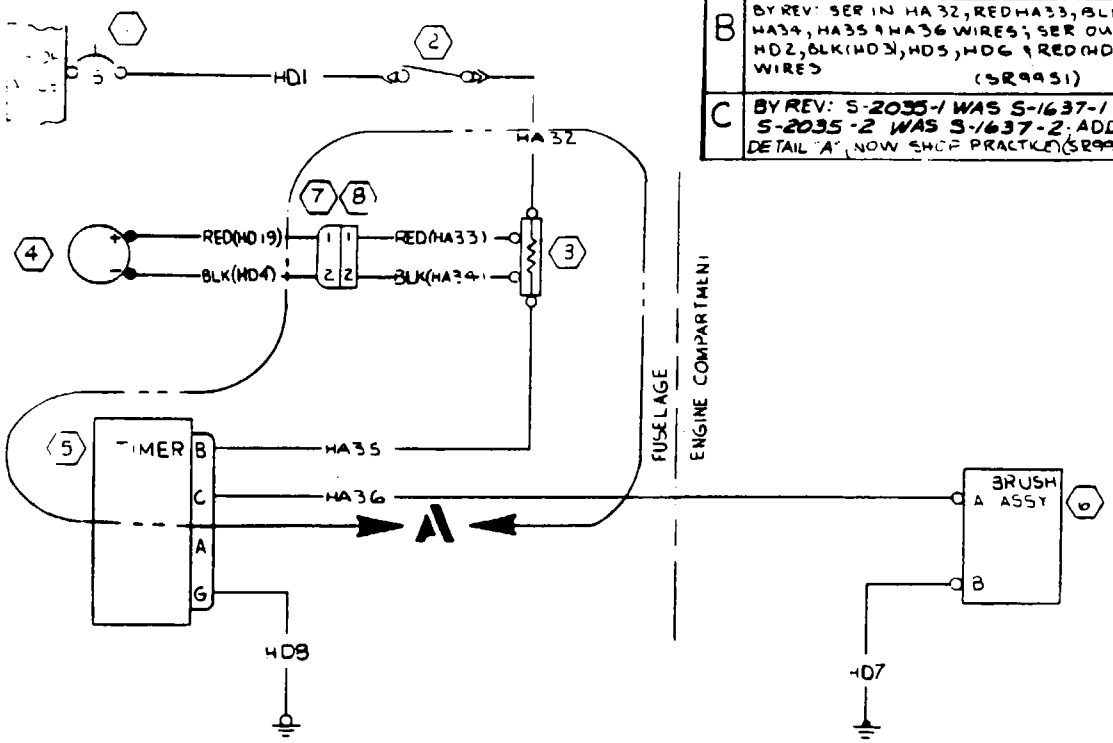

WIRE CODE NO	GA	MATERIAL	LG	TERMINALS			SERIALS
HA32	16			S-1993-2	S-1367-2-12		SER (SR9951) & ON
RED(HA33)	16			S-1367-2-8	S-1636-2		SER (SR9951) & ON
BLK(HA34)	16			S-1367-2-8	S-1636-2		SER (SR9951) & ON
HA35	16			S-1367-2-12	S-1367-2-6		SER (SR9951) & ON
HA36	16			S-1367-2-6	S-1367-2-6		SER (SR9951) & ON
RED(HD19)	16	-16-2		SOLDER	S-1635-2		
RED(HD18)	16	-16-2		S-1367-2-8	S-1636-2		THRU SER (SR9951)
HD8	16			S-1367-2-6	S-1367-2-8		
HD7	16			S-1367-2-6	S-1367-2-8		
HD6	16			S-1367-2-6	S-1367-2-6		THRU SER (SR9951)
HD5	16			S-1367-2-12	S-1367-2-6		THRU SER (SR9951)
BLK(HD4)	16	-16-0		SOLDER	S-1635-1		
BLK(HD3)	16	-16-0		S-1367-2-8	S-1636-2		THRU SER (SR9951)
HD2	16			S-1993-2	S-1367-2-2		THRU SER (SR9951)
HD1	16			S-1367-2-6	S-1993-2		

WIRE TABLE

ITEM NO.	PART NO.	DESCRIPTION
8	S-2035-2	HOUSING
7	S-2035-1	HOUSING
6	3E2071	MODULAR BRUSH ASSY
5	3E1899-1	TIMER
4	C662503-0101	AMMETER
3	22-370-20	SHUNT
2	S-2160-1	SWITCH
1	S-1360-15L	CKT BKR

EQUIPMENT TABLE

CES-1000 IS APPLICABLE
VENDOR CODES PER S-1400
CES-XXXX-CESSNA SPEC. NO.
S-XXX OR CMXXXX-CESSNA
STD. NO.

SUPERSEDES:

SUPERSEDED BY:

CONTRACT NO:

	NAME	DATE
DESIGN	SPENCER	2-27-79
GROUP		3-5-79
DRAWN	HOVHANNISIAN	2-19-79
CHECK	BORLESKE	2-20-79
STRESS		
PROJ	C H MOORE	3-6-79
APPD		
OTHER		

Cessna AIRCRAFT CO.
PAWNEE DIVISION
5800 E. PAWNEE
WICHITA, KANSAS

TITLE
WIRING DIAGRAM — FRCF ANTI-ICE SYSTEM (UPT) TR 182

SIZE C | CODE IDENT. NO. 71379 | DWG NO 2270001

SCALE NONE | (SR9112) | PAGE: 13.3.0

REVISION			
LET	DESCRIPTION	DATE	APPD
C	SEE PAGE 19.3.0 FOR REV		

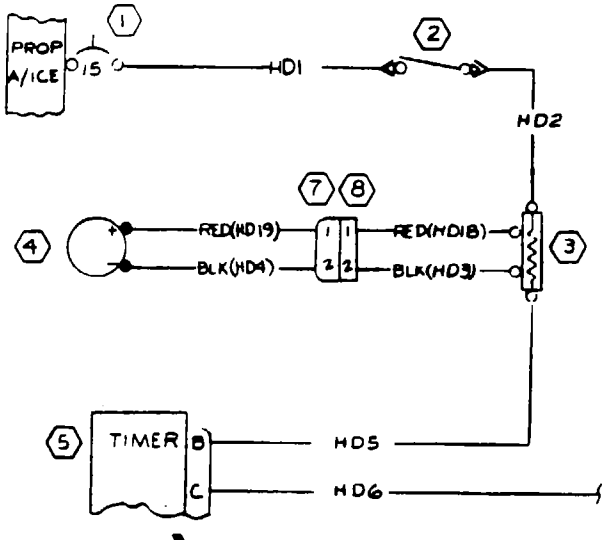

DETAIL A
(APPLIES THRU SER CR9951)

CONTRACT NO		
	NAME	DATE
DESIGN		
GROUP		
DRAWN	M. THOMPSON	7-10-81
CHECK	BORESKE	7-14-81
STRESS		
PROJ	FICKEL	7-27-81
APPD	JRG	
OTHER		

Cessna AIRCRAFT CO. PAWNEE DIVISION 5800 E. PAWNEE WICHITA KANSAS

TITLE: WIRING DIAGRAM - PROP ANTI-ICE SYSTEM (CPT) TR182

SIZE	CODE IDENT NO	DWG NO
C	71379	2270001

SCALE NONE PAGE 19.3.1

REVISION			
LET	DESCRIPTION	DATE	APPD

NOTES:

1. TERMINATE VENDOR FURNISHED WIRE WITH S-1557-2 CAP.
2. TERMINATE VENDOR FURNISHED WIRE WITH S-1367-1-10.

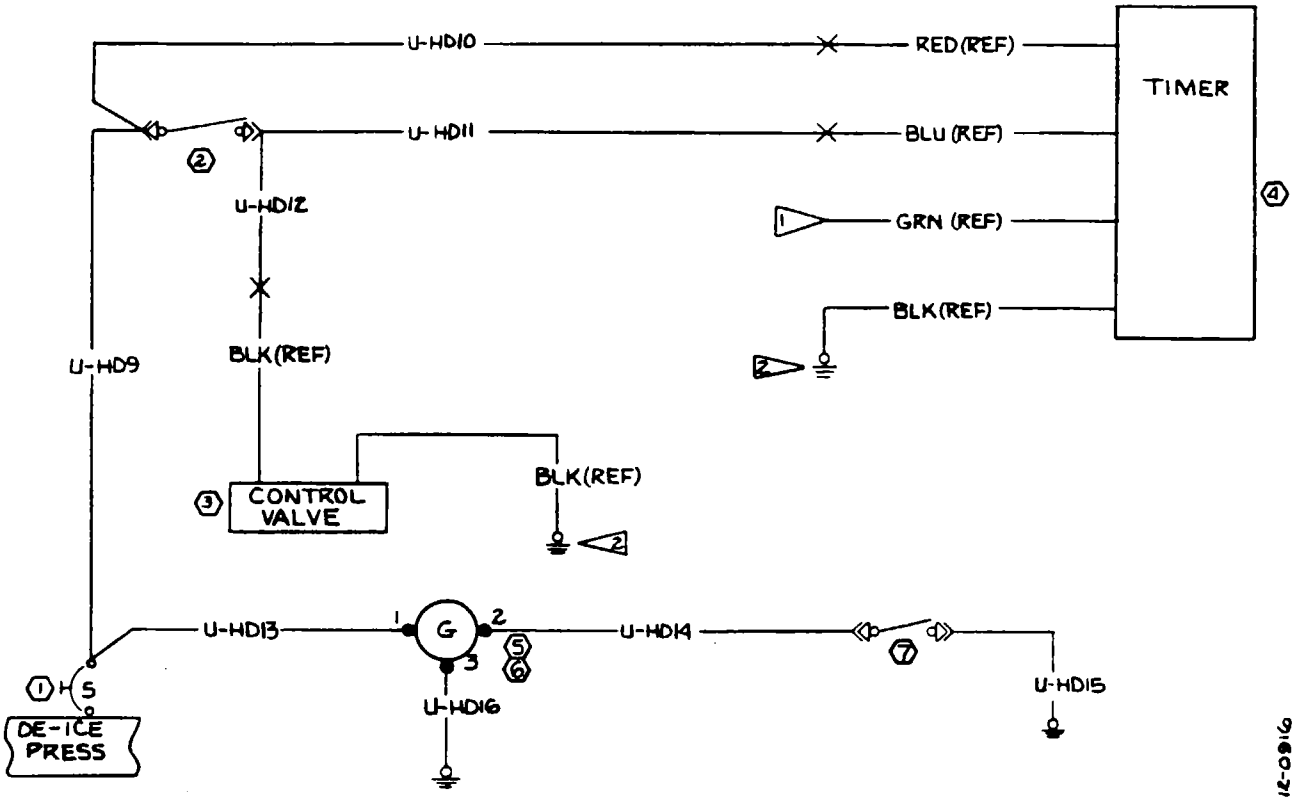

WIRE CODE NO	GA	MATERIAL	LG	TERMINALS			SERIALS
U-HD16	22			SOLDER	S-1367-1-8		
U-HD15	22			S-1493-1	S-1367-1-8		
U-HD14	22			SOLDER	S-1493-1		
U-HD13	22			S-1367-1-8	SOLDER		
U-HD12	20			SEE HD11	S-1370-1		
U-HD11	20			S-1493-2	S-1370-1		
U-HD10	20			SEE HD9	S-1370-1		
U-HD9	20			S-1367-1-8	S-1493-2		

WIRE TABLE

ITEM NO	PART NO.	DESCRIPTION	
7	1D1194-1	PRESSURE SWITCH	
6	M$25237-327	LAMP	
5	M$25041-3	INDICATOR LT.	
4	3D2495-02	TIMER MODULE	
3	3D2346-01	CONTROL VALVE	
2	$-2160-3	SWITCH	
1	M$24510-5	CIRCUIT BREAKER	

EQUIPMENT TABLE

CES-1000 IS APPLICABLE
VENDOR CODES PER S-1400
CES-XXXX=CESSNA SPEC. NO.
S-XXX OR CMXXXX=CESSNA STD. NO.

SUPERSEDES:

SUPERSEDED BY:

CONTRACT NO:		
	NAME	DATE
DESIGN	SPENCER	2-27-79
GROUP	D. Gardner	3-3-79
DRAWN	PMAYFIELD	2-19-79
CHECK	YOUNGERS	2-20-79
STRESS		
PROJ	J.H.MOORE	3-6-79
APPD	JRB	
OTHER		

Cessna. AIRCRAFT CO.
PAWNEE DIVISION
5800 E. PAWNEE
WICHITA KANSAS

TITLE: WIRING DIAGRAM — WING & STABILIZER DE-ICE SYSTEM (OPT)

SIZE	CODE IDENT. NO.	DWG NO
C	71379	2270001

SCALE: NONE (SR 9112) PAGE: 134

12-0916

REVISION			
LET	DESCRIPTION	DATE	APPD
A	BY REV: S-1367-1-8 WAS S-1367-1-10 (SR 9112) (MER R182 EO 774)	HHG 4-19-79	

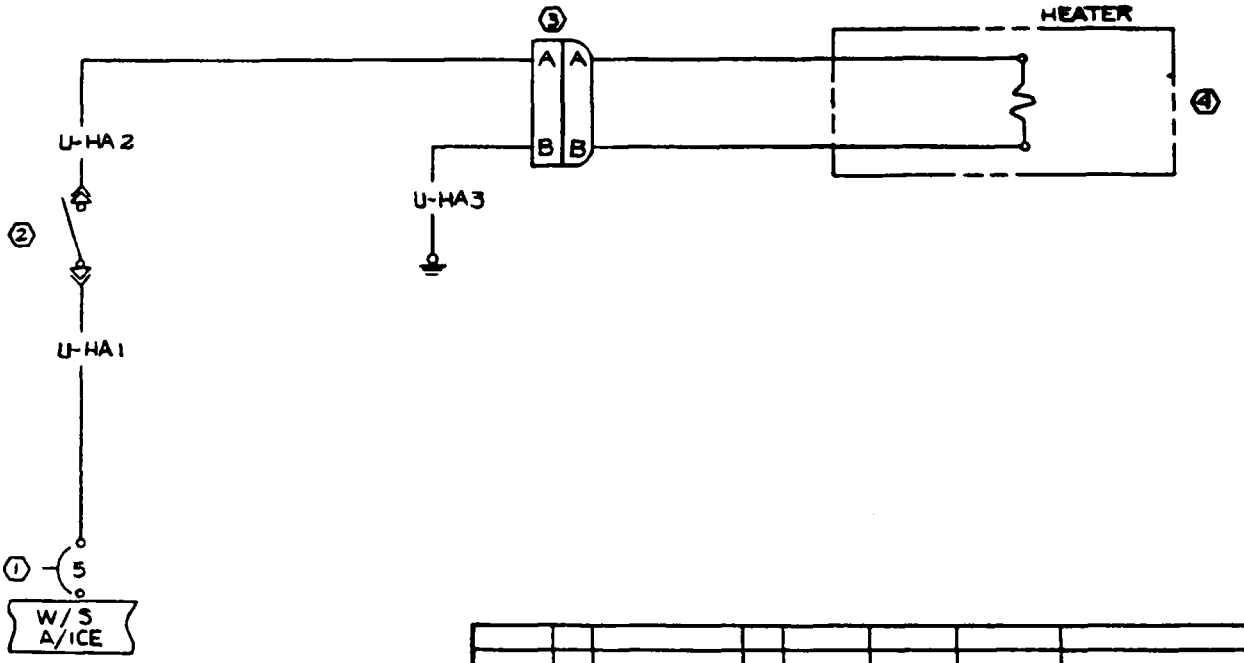

WIRE CODE NO	GA	MATERIAL	LG	TERMINALS			SERIALS
U-HA3	20			SOLDER	S-1367-1-8		
U-HA2	20			S-1493-1	SOLDER		
U-HA1	20			S-1367-1-6	S-1493-1		

WIRE TABLE

ITEM NO	PART NO.	DESCRIPTION
4	1513460	HEATER
3	KPT07E8-2S	RECEPTACLE
2	S-2160-1	SWITCH
1	S-1360-5L	CIRCUIT BREAKER

EQUIPMENT TABLE

CES-1000 IS APPLICABLE
VENDOR CODES PER S-1400
CES-XXXX-CESSNA SPEC. NO.
S-XXX OR CMXXXX-CESSNA STD. NO.

SUPERSEDES:

SUPERSEDED BY.

CONTRACT NO:

	NAME	DATE
DESIGN	SPENCER	2-27-79
GROUP	D. H. Warden	3-3-79
DRAWN	P. MAYFIELD	2-19-79
CHECK	YOUNGERS	2-20-79
STRESS		
PROJ	L. MOOD	3-6-79
APPD		
OTHER		

Cessna AIRCRAFT CO.
PAWNEE DIVISION
5800 E. PAWNEE
WICHITA, KANSAS

TITLE
WIRING DIAGRAM — WINDSHIELD ANTI-ICE SYSTEM (OPT) TR182

SIZE C | CODE IDENT. NO. 71379 | DWG NO 2270001

SCALE NONE | (SR 9112) | PAGE 13.5

REVISION			
LET	DESCRIPTION	DATE	APPD
A	BY REV: S-1638-5 WAS S-1640-6, S-1638-4 WAS S-1641-6 (SR9554) IN TITLE BLOCK WAS (SR9112) (SR9554)	HHG 9-18-79	
B	BY REV: ADD DETAIL A SER IN U-HE13, U-HE14, U-HE15, U-HE16 (SR10099)	REK 2-4-82	
C	BY REV: SER IN HE17, HE18, HE19 & HE20; SER OUT HE2, HE3, HE4 & HE12, REVISE TERMINALS FOR HE13, HE14 HE15 & HE16, REVERSE PINS 1 & 2 ON BLOWER CONNECTORS SR(10099)	REK 3-19-82	

NOTES:

1. REMOVE & DISCARD VENDOR FURNISHED TERMINALS, TERMINATE WITH S-1636-1 TERMINALS.
2. TERMINATE VENDOR FURNISHED LEAD WITH S-1367-1-8.

ITEM NO.	PART NO.	DESCRIPTION
15	S-1360-18L	CIRCUIT BREAKER
14	S-1360-10L	CIRCUIT BREAKER
13	0882862	HIGH PRESSURE SW
12	SD508	COMPRESSOR
11	S-1637-2	HOUSING
10	S-1637-1	HOUSING
9	S-2035-2	HOUSING
8	S-2035-1	HOUSING
7	6303-2	COOLING FAN
6	S-1917-2	RELAY
5	1247243	SWITCH (ARA)
4	0882590	SWITCH (ARA)
3	S-1638-5	HOUSING-PLUG
2	S-1638-4	HOUSING-CAP
1	1120059	BLOWER ASSY (ARA)

EQUIPMENT TABLE

CES-1000 IB APPLICABLE
VENDOR CODES PER S-1400
CES-XXXX-CESSNA SPEC. NO.
S-XXX OR CMXXXX-CESSNA
STD. NO.

SUPERSEDES:

SUPERSEDED BY:

WIRE CODE NO	GA	MATERIAL	LG	TERMINALS		SERIALS
U-HE20	18			S-1635-1	S-1367-1-8	
U-HE19	18			S-1635-2	S-1493-1	
U-HE18	18			S-1635-2	S-1493-1	
U-HE17	18			S-1635-2	S-1493-1	
U-HE16	18			SEE HE17	S-1635-1	SER (SR10099) & ON
U-HE15	18			SEE HE18	S-1635-1	SER (SR10099) & ON
U-HE14	18			SEE HE19	S-1635-1	SER (SR10099) & ON
U-HE13	18			S-1635-1	S-1367-1-8	SER (SR10099) & ON
U-HE12	18			S-1635-1	S-1367-1-8	THRU SER (SR10099)
U-HE11	16			S-1367-2-6	S-1493-2	
U-HE10	16			S-1635-2	S-1635-2	
U-HE9	16			SEE HE8	S-1635-2	
U-HE8	16			S-1493-3	S-1635-2	
U-HE7	18			S-1493-1	S-1367-1-8	
U-HE6	18			S-1493-1	S-1493-1	
U-HE5	18			S-1493-1	S-1493-1	
U-HE4	18			S-1635-1	S-1493-1	THRU SER (SR10099)
U-HE3	18			S-1635-1	S-1493-1	THRU SER (SR10099)
U-HE2	18			S-1635-1	S-1493-1	THRU SER (SR10099)
U-HE1	18			S-1367-1-6	S-1493-1	

WIRE TABLE

CONTRACT NO:

	NAME	DATE
DESIGN	SPENCER	2-27-79
GROUP		3-5-79
DRAWN	PMAYFIELD	2-19-79
CHECK	YOUNGERS	2-20-79
STRESS		
PROJ	J.H. MOORE	3-6-79
APPD		
OTHER		

Cessna AIRCRAFT CO.
PAWNEE DIVISION
5800 E. PAWNEE
WICHITA, KANSAS

TITLE
WIRING DIAGRAM — AIR CONDITIONER (OPT)

SIZE C | CODE IDENT. NO. 71379 | DWG NO 2270001

SCALE: NONE | (SR9554) | PAGE: 3.6.0

REVISION			
LET	DESCRIPTION	DATE	APPD
C	SEE PG. 13-6.0 FOR REV.		

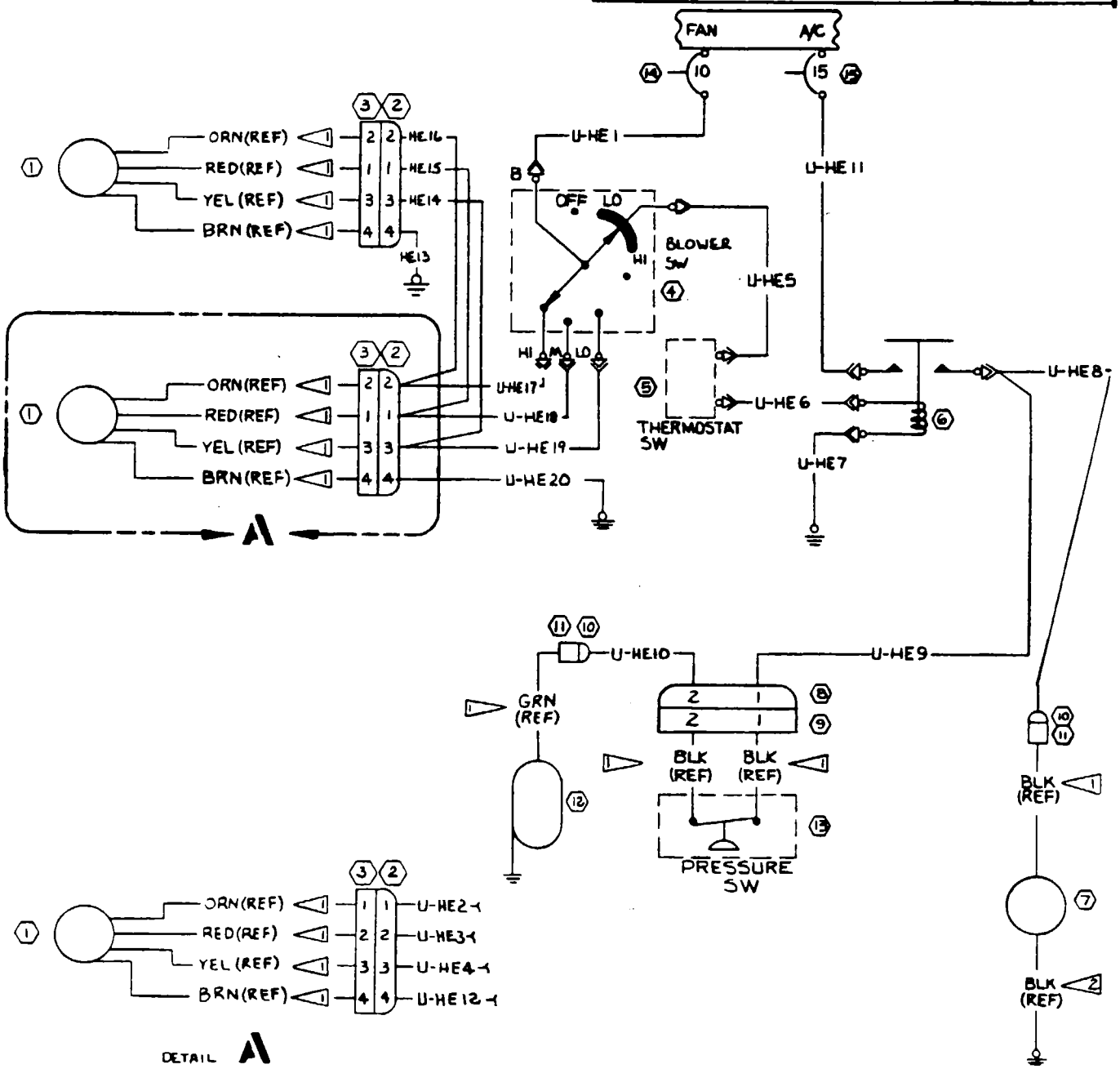

CONTRACT NO.			Cessna AIRCRAFT CO.	PAWNEE DIVISION 5800 E PAWNEE WICHITA, KANSAS
	NAME	DATE	TITLE	
DESIGN	SPENCER	2-27-79	AIR CONDITIONER (OPT)	
GROUP	D.H. Hardman	2-5-79		
DRAWN	P.MAYFIELD	2-19-79		
CHECK	YOUNGERS	2-20-79		
STRESS				
PROJ	J.H. MOORE	3-6-79	SIZE C	CODE IDENT NO. 71379 / DWG NO. 2270001
APPD	JRB		SCALE NONE	(SR9554) / PAGE 13.6.1
OTHER				

REVISION			
LET	DESCRIPTION	DATE	APPD
A	BY REV ADD NOTE 2, MS3057-12A, MS3106A20-15S, C165020-0101 WAS C-40171 (SR9632)(REF)	MKT 10-13-80	
B	BY REV: SER IN HA32, RED(HA33), BLK (HA34), HA38, HA39, HA40 WIRES; SER OUT HA22, RED(HA25), BLK(HA26) HA27, HA28, HA29 WIRES (SR9951)	GLS 2/9/81	

1 VENDOR FURNISHED WIRES

2 FOR COMPLETE INSTL

3) THREE EACH OF THESE WIRES ARE REQUIRED

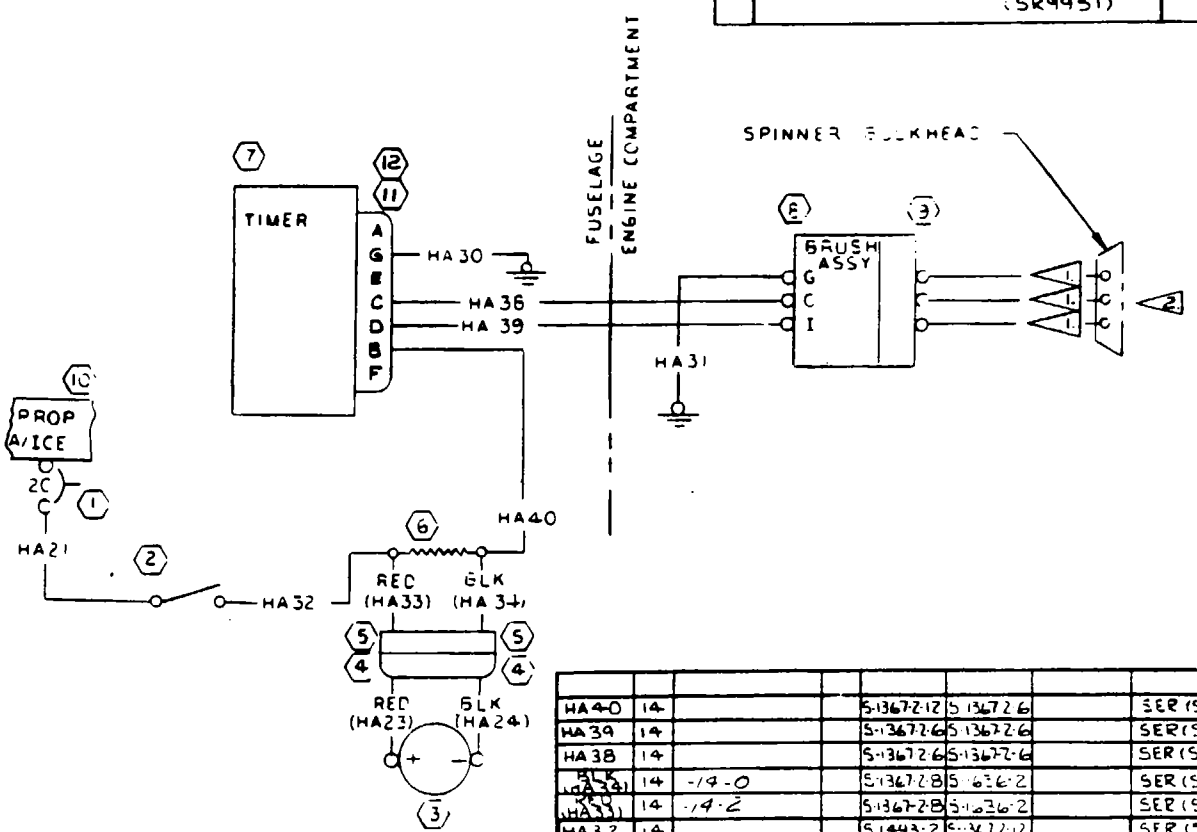

HA40	14			S-1367-2-12	S-1367-2-6		SER (SR9951) & ON
HA39	14			S-1367-2-6	S-1367-2-6		SER (SR9951) & ON
HA38	14			S-1367-2-6	S-1367-2-6		SER (SR9951) & ON
BLK (HA34)	14	-14-0		S-1367-2-8	S-1636-2		SER (SR9951) & ON
RED (HA33)	14	-14-2		S-1367-2-8	S-1636-2		SER (SR9951) & ON
HA32	14			S-1493-2	S-1367-2-2		SER (SR9951) & ON
HA31	14			S-1367-2-6	S-1367-2-6		
HA30	14			S-1367-2-6	S-1367-2-6		
HA29	14			S-1367-2-6	S-1367-2-6		THRU SER (SR9951)
HA28	14			S-1367-2-6	S-1367-2-6		THRU SER (SR9951)
HA27	14			S-1367-2-2	S-1367-2-6		THRU SER (SR9951)
BLK (HA26)	14	-14-0		S-1367-2-8	S-1636-2		THRU SER (SR9951)
RED (HA25)	14	-14-2		S-1367-2-8	S-1636-2		THRU SER (SR9951)
BLK (HA24)	14	-14-0		S-1635-2	SOLDER		
RED (HA23)	14	-14-2		S-1635-2	SOLDER		
HA22	14			S-1493-2	S-1367-2-12		THRU SER (SR9951)
HA21	14			S-1367-2-6	S-1493-2		
WIRE CODE NO	GA	MATERIAL	LG	TERMINALS			SERIALS

WIRE TABLE

12	MS3057-12A	CLAMP	
11	MS3106A20-15S	PLUG	
10	2270014	BUS BAR	
9	C-40161	SLIP RING ASSY	
8	C-40153	BRUSH BLOCK ASSY	
7	C165020-0101	TIMER	
6	22-370-20	SHUNT	
5	S-2035-2	HOUSING	
4	S-2035-1	HOUSING	
3	C662503	AMMETER	
2	S-2160-1	SWITCH	
1	S-1360-2CL	CIRCUIT BREAKER	
ITEM NO.	PART NO.	DESCRIPTION	

EQUIPMENT TABLE

CES-1000 IS APPLICABLE
VENDOR CODES PER S-1400
CES-XXXX-CESSNA SPEC. NO.
S-XXX OR CMXXXX-CESSNA STD. NO.

SUPERSEDES:

SUPERSEDED BY:

CONTRACT NO:

	NAME	DATE
DESIGN	G. STAMM	5-15-80
GROUP		
DRAWN	G. STAMM	5-15-80
CHECK	ALBRIGHT	5-15-80
STRESS		
PROJ	FICKEL	5-15-80
APPD		5-15-80
OTHER		

Cessna AIRCRAFT CO.
PAWNEE DIVISION
5800 E PAWNEE
WICHITA KANSAS

TITLE
WIRING DIAGRAM — PROP ANTI-ICING 3 BLADE (OPTIONAL) TR182

SIZE	CODE IDENT NO.	DWG NO
C	71379	2270001

SCALE: NONE (SR9112) PAGE: 13-6-C

REVISION			
LET	DESCRIPTION	DATE	APPD

NOTES:

1. THESE SWITCHES PART OF C301002-0102 ACTUATOR ASSY

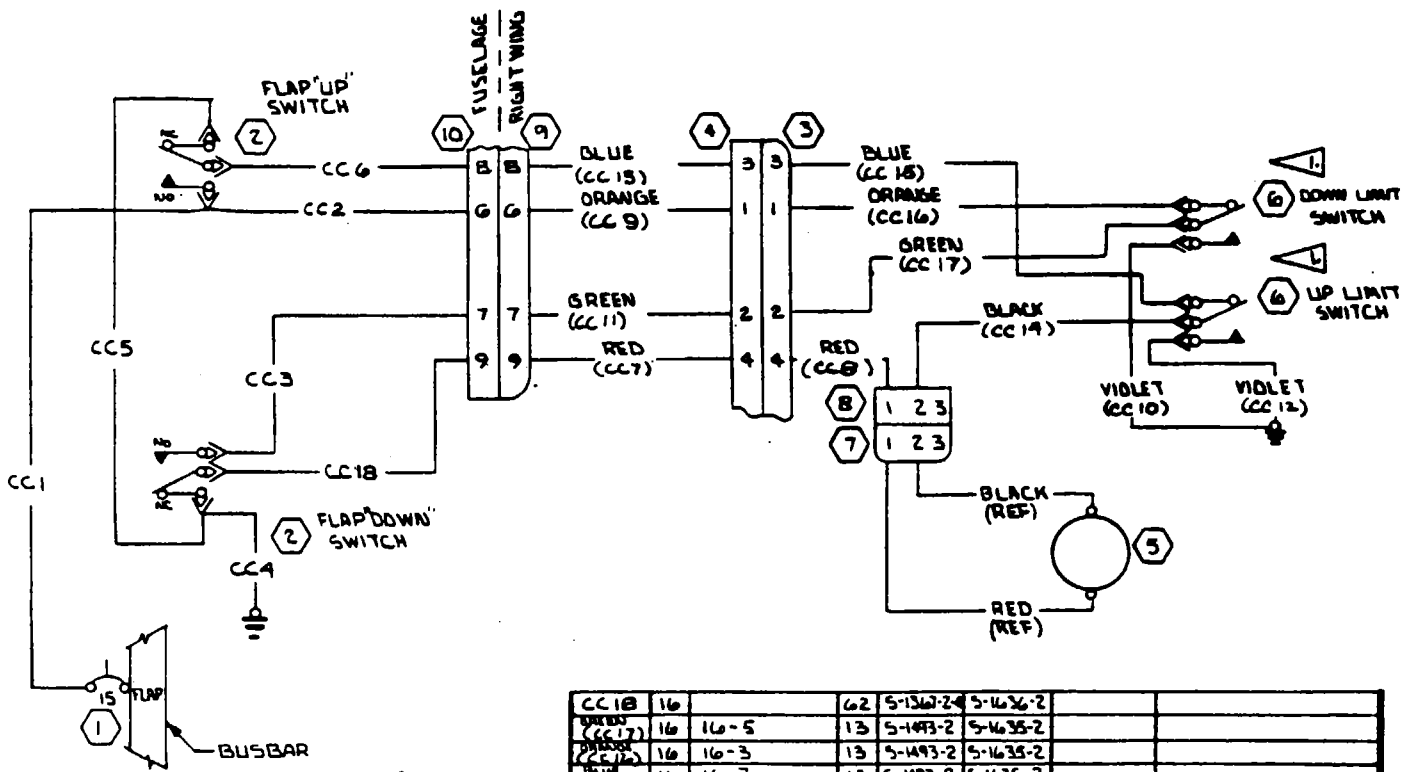

INACTIVE

EFF THRU SERIES R 3112)
PSM 2-19-79

WIRE CODE NO	GA	MATERIAL	LG	TERMINALS			SERIALS
CC18	16		62	S-1367-2-4	S-1636-2		
GREEN (CC17)	16	16-5	13	S-1493-2	S-1635-2		
ORANGE (CC16)	16	16-3	13	S-1493-2	S-1635-2		
BLUE (CC15)	16	16-7	13	S-1493-2	S-1635-2		
BLACK (CC14)	16	16-0	13	S-1636-2	S-1493-2		
BLUE (CC13)	16	16-6	105	S-1635-2	S-1636-2		
VIOLET (CC12)	16	16-7	19	S-1493-2	S-1367-2-8		
GREEN (CC11)	16	16-5	105	S-1635-2	S-1636-2		
VIOLET (CC10)	16	16-7	19	S-1493-2	S-1367-2-8		
ORANGE (CC9)	16	16-3	105	S-1635-2	S-1636-2		
RED (CC8)	16	16-2	13	S-1635-2	S-1636-2		
RED (CC7)	16	16-2	105	S-1636-2	S-1635-2		
CC6	16		102	S-1367-2-4	S-1636-2		
CC5	16		6	S-1367-2-4	S-1367-2-4		
CC4	16		10	S-1367-2-4	S-1367-2-8		
CC3	16		62	S-1636-2	S-1367-2-4		
CC2	16		62	S-1367-2-4	S-1636-2		
CC1	16		36	S-1367-2-6	S-1367-2-4		

WIRE TABLE

ITEM NO	PART NO.	DESCRIPTION
10	S-1641-9	HOUSING-SOCKET
9	S-1640-9	HOUSING - PIN
8	S-1638-1	HOUSING - PLUG
7	S-1638-2	HOUSING - CAP
6	V3-1-D9	SWITCH
5	C301002-0102	ACTUATOR ASSY
4	S-1641-6	HOUSING-PLUG
3	S-1640-6	HOUSING-PIN
2	S-1906-1	SWITCH
1	S-1360-15L	CIRCUIT BREAKER

EQUIPMENT TABLE

CES-1000 IS APPLICABLE
VENDOR CODES PER S-1400
CES-XXXX-CESSNA SPEC. NO.
S-XXX OR CMXXXX-CESSNA STD. NO.

SUPERSEDES:

SUPERSEDED BY: PG. 14.3

CONTRACT NO:

	NAME	DATE
DESIGN	SPENCER	3-28-77
GROUP	[illegible]	4-13-77
DRAWN	HARVEY	3-16-77
CHECK	J. YOUEL	3-18-77
STRESS		
PROJ	[illegible]	4-14-77
APPD	[illegible]	
OTHER		

Cessna AIRCRAFT CO.
COMMERCIAL AIRCRAFT DIV.
5800 E. PAWNEE
WICHITA, KANSAS

TITLE: WIRING DIAGRAM — WING FLAPS

SIZE: C | CODE IDENT. NO. 71379 | DWG NO 2270001

SCALE: NONE | (SP-8462) | PAGE: 14.1

REVISION			
LET	DESCRIPTION	DATE	APPD
A	BY REV: DELETE CD15 WIRE, S-1367-1-6/CD14 WAS S-1367-1-8, DELETE S-1637-1 & S-1637-2 (NOW SHOP PRACTICE) SIB2 EC655	CRS 12-14-77	JAB
B	BY REV: ADD NOTE 1 (SR9369)	CMK 7-13-78	
C	BY REV: ADD BLK(REF), GROUND (NOW SHOP PRACTICE) (MER 182-ED-0829)	JFS 8-5-80	JAB

NOTES:

1. C611003-0101 TRIM REGULATOR WITH MOD "A" OR LATER WILL BE REQD AT SER (SR9369) & ON ALL SPARES. MOD DESIGNATION WILL BE A SUFFIX TO THE VENDOR PART NUMBER

INACTIVE EFF THRU SER (SR9632) 3-21-80

32-0916

PART NO.	DESCRIPTION	
20	S-1985-1	SWITCH - MIKE KEY
19	1570307	CONNECTOR ASSY
18	S-1641-6	HOUSING
17	TCS-208	CLUTCH
16	C611003-0101	VOLTAGE REGULATOR <1
15	C610502-0101	TRIM MOTOR
14	S-1637-1	HOUSING
13	S-1637-2	HOUSING
12	S-1961-2-0	HOUSING
11	S-1961-1-0	HOUSING
10	3421-0000	CONNECTOR SOCKET
9	1260243	MAPLIGHT
8	1570307	CABLE
7	S-1360-5L	CIRCUIT BREAKER
6	S-1640-6	HOUSING
5	1270844	CABLE ASSY
4	3473-3000	SOCKET
3	1270842	CONNECTOR ASSY
2	7101-P1	TRIM DISENGAGE SW
1	S-2030-1	PITCH TRIM SW

EQUIPMENT TABLE

WIRE CODE NO	GA	MATERIAL	LG	TERMINALS			SERIALS
RED(2)	22	BS68-2		SOLDER	SOLDER		
RED(1)	22	BS68-2		SOLDER	SOLDER		
ORN	22	BS68-2		SOLDER	SOLDER		
CD16	20			S-1963-2	S-1636-1		
CD14	20			S-1367-1-6	S-1636-1		
BRN	22	BS68-1		SOLDER	SOLDER		
BLU (CD12)	22	-22-6		SEE CD4	S-1636-1		
GRN (CD11)	22	-22-5		SEE CD7	S-1636-1		
BLK (CD10)	22	-22-0		S-1370-1	S-1367-1-8		
YEL (CD9)	22	-22-4		S-1636-1	S-1636-1		
GRN (CD7)	22	-22-5		S-1635-1	S-1636-2		
GRN (CD6)	22	-22-5		S-1635-1	S-1636-1		
BLK (CD5)	22	-22-0		S-1367-1-8	S-1636-1		
BLU (CD4)	22	-22-6		S-1635-1	S-1636-2		
RED (CD3)	22	-22-2		S-1635-1	S-1636-1		
CD2	20			S-1963-2	S-1636-1		
CD1	20			S-1963-2	S-1636-1		

WIRE TABLE

CONTRACT NO:

	NAME	DATE
DESIGN	SPENCER	3-28-77
GROUP	W.H. Hendrix	4-13-77
DRAWN	HARVEY	3-16-77
CHECK	J YOUEL	3-18-77
STRESS		
PROJ	J.D. MOORE	4-14-77
APPD	CRS	
OTHER		

Cessna AIRCRAFT CO. PAWNEE DIVISION 5800 E. PAWNEE WICHITA, KANSAS

TITLE: WIRING DIAGRAM — ELECTRIC TRIM (OPT)

SIZE: C | CODE IDENT. NO. 71379 | DWG NO 2270001

SCALE: NONE | (SR8462) | PAGE: 14.2

CES-1000 IS APPLICABLE
VENDOR CODES PER S-1400
CES-XXXX-CESSNA SPEC. NO.
S-XXX OR CMXXXX-CESSNA STD. NO.

SUPERSEDES:

SUPERSEDED BY: P14.4.0

Electric Trim (OPT) (Sheet 1 of 2)

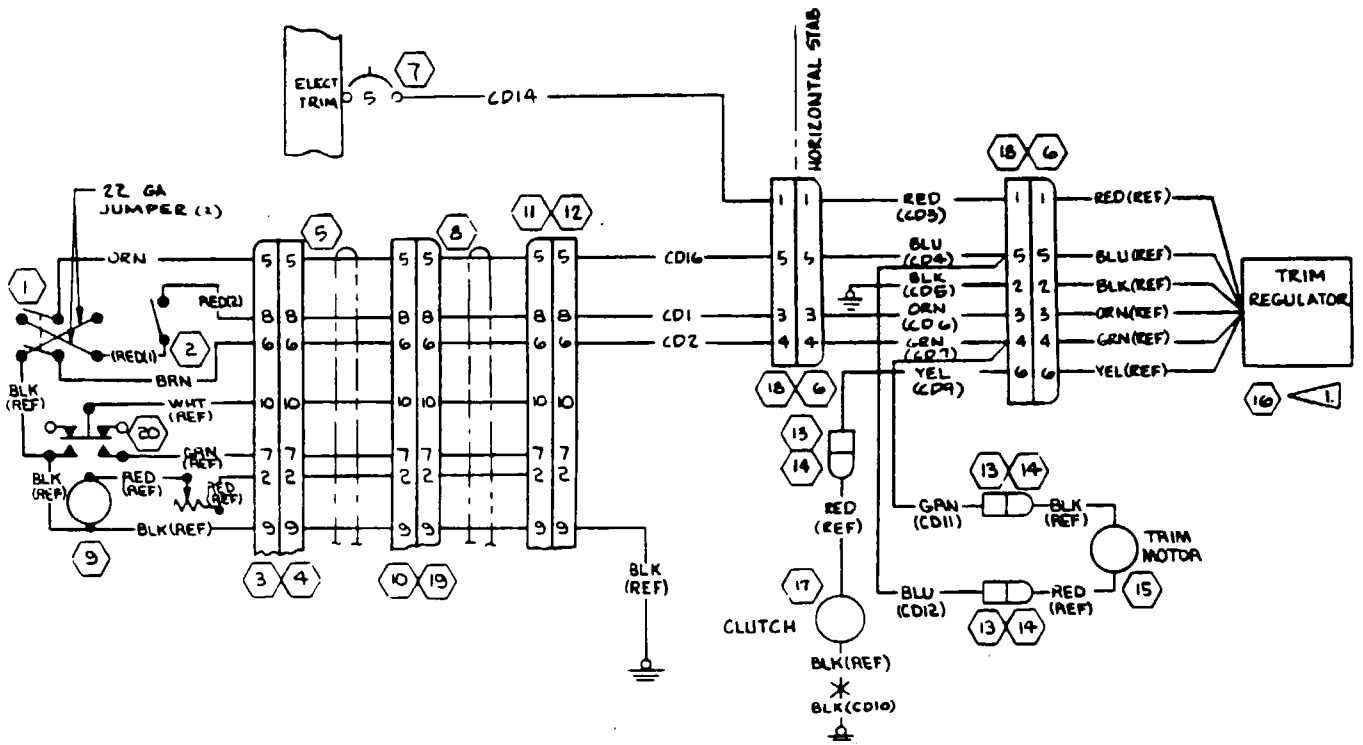

CONTRACT NO:			Cessna AIRCRAFT CO. PAWNEE DIVISION 3800 E. PAWNEE WICHITA, KANSAS
	NAME	DATE	TITLE WIRING DIAGRAM — ELECTRIC TRIM (OPT)
DESIGN	SPENCER	3-28-77	
GROUP	W. H. Hardin	4-13-77	
DRAWN	HARVEY	4-16-77	
CHECK	J YOUEL	5-18-77	
STRESS			
PROJ	J. W. MOORE	4-14-77	SIZE C / CODE IDENT NO 71379 / DWG NO 2270001
APPD			
OTHER			SCALE: NONE / (SR8962) / PAGE: 142

Electric Trim (OPT) (Sheet 2 of 2)

REVISION			
LET	DESCRIPTION	DATE	APPD
A	BY REV: RED(U-CC22) WAS BLU(U-CC13), RED (U-CC23) WAS BLU(U-CC15), BLU(U-CC24) WAS RED (U-CC7), BLU(U-CC25) WAS ORN(U-CC16), ADD S-2035-1, S-2035-2, S-1493-2 WAS S-1367-2-8/CC 26, REVERSE SWITCH FUNCTION, VIO (U-CC26) WAS VIO(U-CC10), RELOCATE U-CC26 & U-CC4 (MER R182 E0790) (SR 9112)	HHG 6-19-79	
B	BY REV: S-1638-5 WAS S-2035-2 S-1638-4 WAS S-2035-1 (SR9632)	GLS 5/21/80	

NOTES:

1. THESE SWITCHES PART OF C30100Z ACTUATOR ASSY.

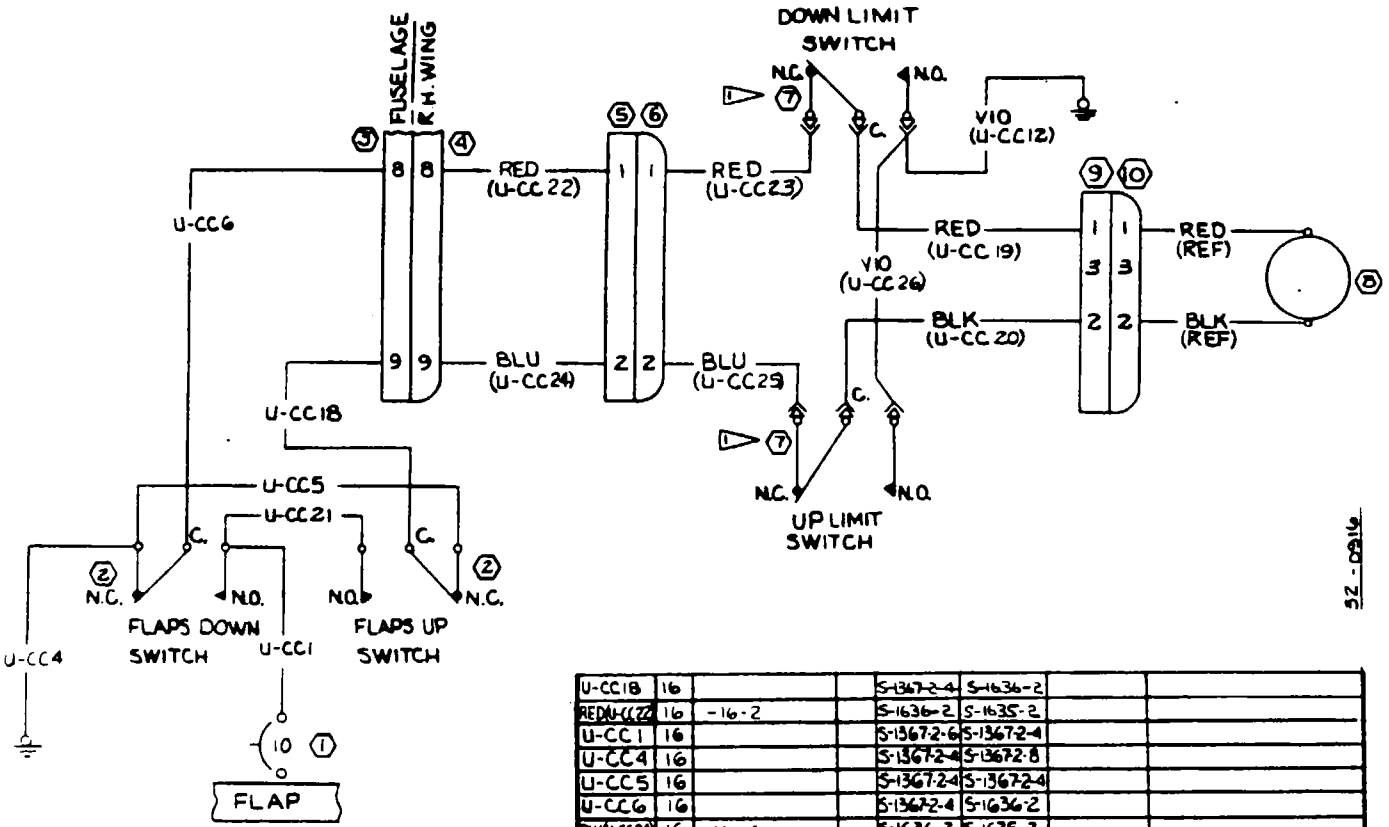

WIRE CODE NO	GA	MATERIAL	LG	TERMINALS		SERIALS
U-CC18	16			S-1367-2-4	S-1636-2	
RED(U-CC22)	16	-16-2		S-1636-2	S-1635-2	
U-CC1	16			S-1367-2-6	S-1367-2-4	
U-CC4	16			S-1367-2-4	S-1367-2-8	
U-CC5	16			S-1367-2-4	S-1367-2-4	
U-CC6	16			S-1367-2-4	S-1636-2	
BLU(U-CC24)	16	-16-6		S-1636-2	S-1635-2	
VIO (U-CC26)	16	-16-7		S-1493-2	S-1493-2	
VIO (U-CC12)	16	-16-7		S-1493-2	S-1367-2-8	
RED(U-CC23)	16	-16-2		S-1493-2	S-1635-2	
BLU(U-CC25)	16	-16-6		S-1493-2	S-1635-2	
RED (U-CC19)	16	-16-2		S-1636-2	S-1493-2	
BLK (U-CC20)	16	-16-0		S-1636-2	S-1493-2	
U-CC21	16			S-1367-2-4	S-1367-2-4	

WIRE TABLE

	PART NO.	DESCRIPTION
10	S-1638-2	HOUSING
9	S-1638-1	HOUSING
8	C30100Z	ACTUATOR ASSY
7	V3-1-D9	SWITCH
6	S-1638-4	HOUSING-CAP
5	S-1638-5	HOUSING-PLUG
4	S-1640-9	HOUSING-PIN
3	S-1641-9	HOUSING-SOCKET
2	S-1906-1	SWITCH
1	S-1360-10L	CIRCUIT BREAKER

ITEM NO. — EQUIPMENT TABLE

CES-1000 IS APPLICABLE
VENDOR CODES PER S-1400
CES-XXXX=CESSNA SPEC. NO.
S-XXX OR CMXXXX=CESSNA STD. NO.

SUPERSEDES: PG 14.1

SUPERSEDED BY:

CONTRACT NO:

	NAME	DATE
DESIGN	SPENCER	2-27-78
GROUP		3-3-79
DRAWN	P MAYFIELD	2-19-79
CHECK	YOUNGERS	2-20-79
STRESS		
PROJ	J H MOORE	3-6-79
APPD		
OTHER		

Cessna AIRCRAFT CO. PAWNEE DIVISION 5800 E. PAWNEE WICHITA KANSAS

TITLE: WIRING DIAGRAM — WING FLAPS

SIZE: C | CODE IDENT. NO. 71379 | DWG NO 2270001

SCALE: NONE | (SR 9112) | PAGE: 14.5

NOTES:

1. MATERIAL IS RCF 5140 COIL CORD, VENDOR CODE (096906) THRU SER (SR10003)
   MATERIAL IS RCF 5130B COIL CORD VENDOR CODE (096906) SER (SR10003) & ON

REVISION			
LET	DESCRIPTION	DATE	APPD
A	BY REV: 44430-3257 WAS 44430-5023; ITEM 8 WAS 11; ITEM 9 WAS 12 (SR9632)	GLS 8/5/80	
B	BY REV: ADD WIRE CALLOUTS U-CD25 THRU U-CD30; ADD NEW PIN NOTE 1 (SR9632)(REF) ADD DETAIL "A" (SR10003)	RCT 11-12-80	
C	BY REV: PIN 6 WAS 7 AND PIN 7 WAS 6 / TRIM ACT CONNECTOR S-2349-1 (SR9632)(REF)	GLS 1/19/81	
D	BY REV: RCF5130B WAS RCF5130A COIL CORD PER NOTE 1 (SR10003)	GLS 4-30-81	
E	PN REV: S-2099-9 WAS S-2099-6/GRN (U-CD28), BLU (U-CD27), BLK (U-CD29) & WHT/YEL (U-CD24) NOW SHOP PRACTICE	WHH 6-7-84	

INACTIVE THRU SER (SR9551) 6-17-81

51-00916

WIRE CODE NO	GA	MATERIAL	LG	TERMINALS		SERIALS
CD22	20			S-1963-2	S-1367-1-8	
U-CD28 GRN		-20-5		S-2099-9	S-2099-8	
U-CD27 BLU		-20-6		S-2099-9	S-2099-9	
U-CD29 BLK	20	-20-0		S-2099-9	S-1367-1-8	
U-CD30 BLK	22	-22-0		S-1963-2	S-1367-1-8	
U-CD25 ORN	20	-20-4			S-2099-9	
U-CD26 WHT/ORN	20	-20-9-3			S-2099-9	
U-CD24 WHT/YEL	20	-20-9-4			S-2099-9	
U-CD23 YEL	20	-20-4		S-1963-2	S-2099-9	
RED	24	1		SOLDER	S-1963-3	
WHT/ORN						
ORN						
WHT/YEL						
YEL						
BLK(2)	24	1		SOLDER	S-1963-3	

WIRE TABLE

ITEM NO	PART NO	DESCRIPTION
10	S-1985-3	SWITCH
9	44430-3257	TRIM ACTUATOR
8	S-2349-1	CONNECTOR
7	S-1232-2	CIRCUIT BREAKER
6	S-1962-2-0	HOUSING
5	S-1962-1-0	HOUSING
4	2270030	CABLE ASSY
3	2270035	RELAY ASSY
2	S-2349-2	CONNECTOR
1	7205P4	SWITCH

EQUIPMENT TABLE

CES-1000 IS APPLICABLE
VENDOR CODES PER S-1400
CES-XXXX=CESSNA SPEC. NO
S-XXX OR CMXXXX=CESSNA STD. NO.

SUPERSEDES: 2270001 PG 14.2

SUPERSEDED BY: 2270001 PG 14.5C FIG 5-1

CONTRACT NO:

	NAME	DATE
DESIGN		
GROUP		7-22-80
DRAWN	WHITSON	7-22-80
CHECK	BORLESKE	7-23-80
STRESS		
PROJ	GFICKEL	7-25-80
APPD		
OTHER		

Cessna AIRCRAFT CO.
PAWNEE DIVISION
5800 E. PAWNEE
WICHITA, KANSAS

TITLE
WIRING DIAGRAM —
ELECTRIC TRIM (OPT)

SIZE C | CODE IDENT NO 71379 | DWG NO 2270001

SCALE NONE | (SR9632) | PAGE: 14.4.0

REVISION			
LET	DESCRIPTION	DATE	APPD
C	SEE PG 14.4.0 FOR REVISION		

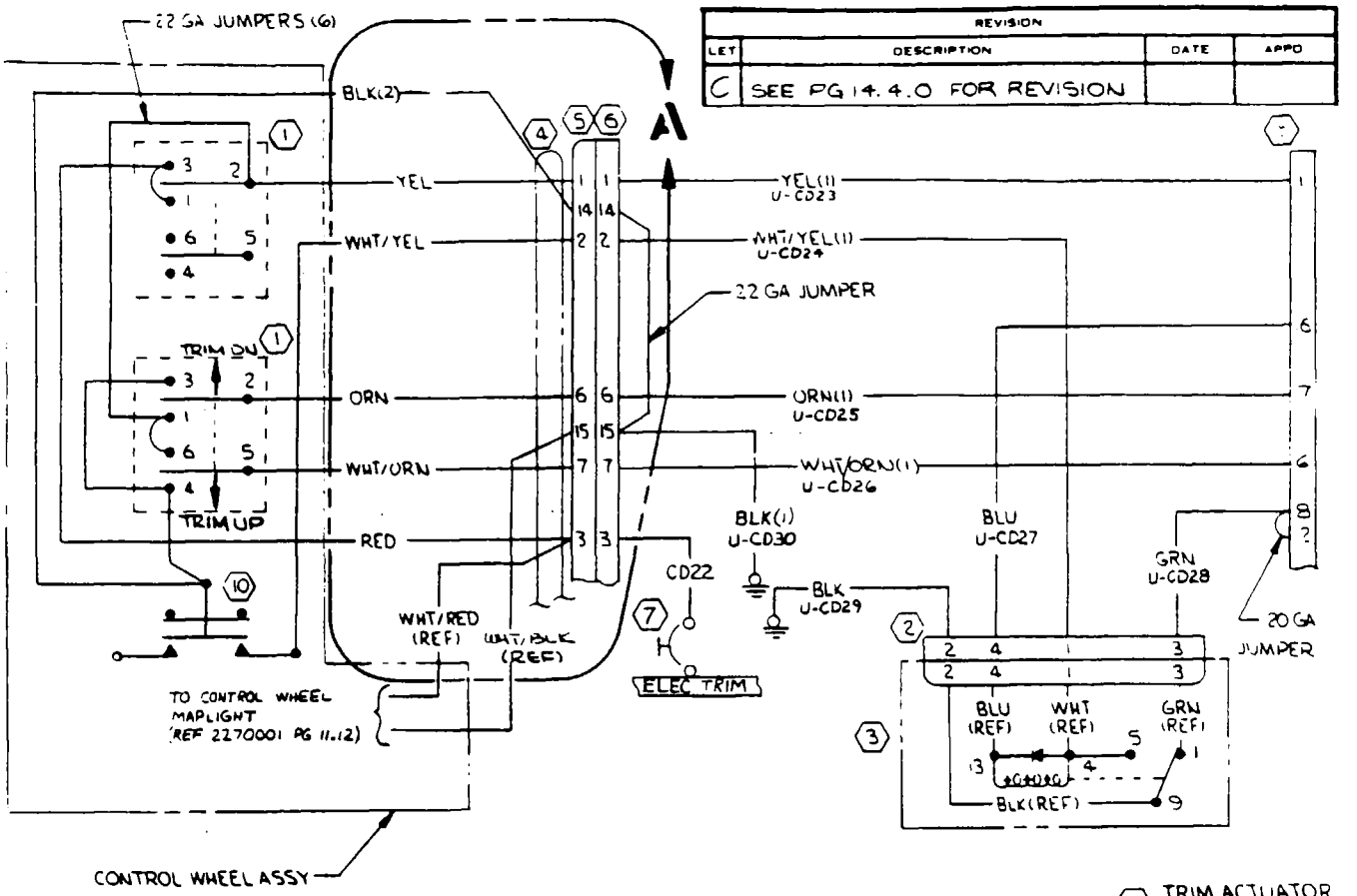

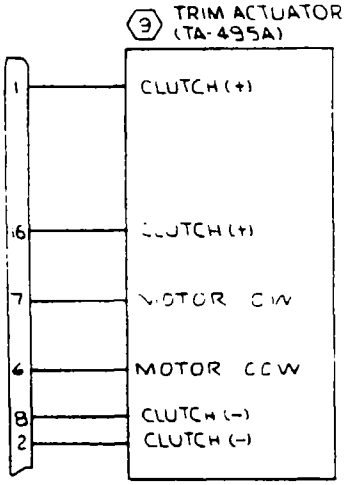

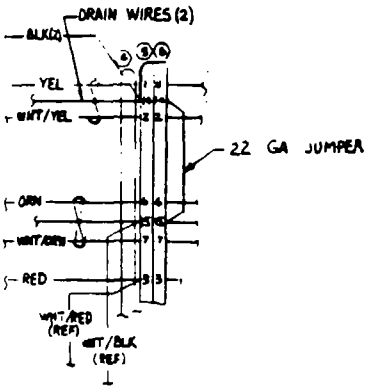

DETAIL A
(APPLIES THRU SER(SR10003))

INACTIVE THRU SER(SR9951) 6-17-81

CONTRACT NO.			Cessna AIRCRAFT CO.	PAWNEE DIVISION 5800 E PAWNEE WICHITA KANSAS
	NAME	DATE	TITLE	
DESIGN			WIRING DIAGRAM ELECTRIC TRIM (OPT)	
GROUP		7-22-80		
DRAWN	WHITSON	7-22-80		
CHECK	BORLESKE	7-23-80		
STRESS				
PROJ	KIKEL	7-26-80	SIZE C / CODE IDENT NO 71379	DWG NO 2270001
APPD			SCALE NONE	(SR96321) PAGE 14.4.1
OTHER				

REVISION			
LET	DESCRIPTION	DATE	APPD

NOTES:

1. MATERIAL IS RCF 5140 COIL CORD, VENDOR CODE (096906) THRU SER (SR 10003)
   MATERIAL IS RCF 5130 B COIL CORD VENDOR CODE (096906) SER (SR10003) & ON

INACTIVE
EFF THRU SER (SR10713)
TMS 9-8-83 REH ARS

WIRE CODE NO	GA	MATERIAL	LG	TERMINALS		SERIALS
CD32	18			S-1963-2	S-1367-1-B	
CD31 BLK	18	-18-0		SOLDER	S-1963-3	
VIO	24	1		SOLDER	S-1963-3	
CD22	18S	S-1461-18-9		S-1963-2	S-1367-1-B	
UCD28 GRN	20	-20-5		S-2099-6	S-2099-9	
UCD27 BLU	20	-20-6		S-2099-6	S-2099-9	
UCD29 BLK	20	-20-0		S-2099-6	S-1367-1-B	
U-CD30 BLK(1)	18	-18-0		S-1963-2	S-1367-1-B	
U-CD25 GRN(1)	20	-20-4			S-2099-9	
U-CD26 WHT/ORN(1)	20	-20-9-3			S-2099-9	
U-CD24 WHT/YEL(1)	20	-20-9-4			S-2099-6	
UCD23 YEL	20	-20-4		S-1963-2	S-2099-9	
RED	24	1		SOLDER	S-1963-3	
WHT/ORN						
ORN						
WHT/YEL						
YEL						
BLK(2)	24	1		SOLDER	S-1963-3	

WIRE TABLE

ITEM NO	PART NO.	DESCRIPTION	
10	S-1985-3	SWITCH	
9	44430-3257	TRIM ACTUATOR	
8	S-2349-1	CONNECTOR	
7	S-1232-2	CIRCUIT BREAKER	
6	S-1962-20	HOUSING	
5	S-1962-1-0	HOUSING	
4	2270030	CABLE ASSY	
3	2270035	RELAY ASSY	
2	S-2349-2	CONNECTOR	
1	7205P4	SWITCH	

EQUIPMENT TABLE

CES-1000 IS APPLICABLE
VENDOR CODES PER S-1400
CES-XXXX=CESSNA SPEC. NO.
S-XXX OR CMXXXX=CESSNA STD. NO.

SUPERSEDES: 2270001 PG 14.4.0/14.4.1
SUPERSEDED BY: PG. 14.6.0

CONTRACT NO:	NAME	DATE
DESIGN		
GROUP	W. Hamilton	7-6-81
DRAWN	M. THOMPSON	7-13-81
CHECK	BORLESKE	7-14-81
STRESS		
PROJ	[illegible]	7-21-81
APPD	ARS	
OTHER		

Cessna. AIRCRAFT CO.
PAWNEE DIVISION
5800 E. PAWNEE
WICHITA, KANSAS

TITLE
WIRING DIAGRAM — ELECTRIC TRIM (OPT)

SIZE	CODE IDENT NO.	DWG NO
C	71379	2270001

SCALE NONE (SR9951) PAGE 14.5.0

9/00-15

REVISION			
LET	DESCRIPTION	DATE	APPD
	SEE PAGE 14.5 O FOR REV		

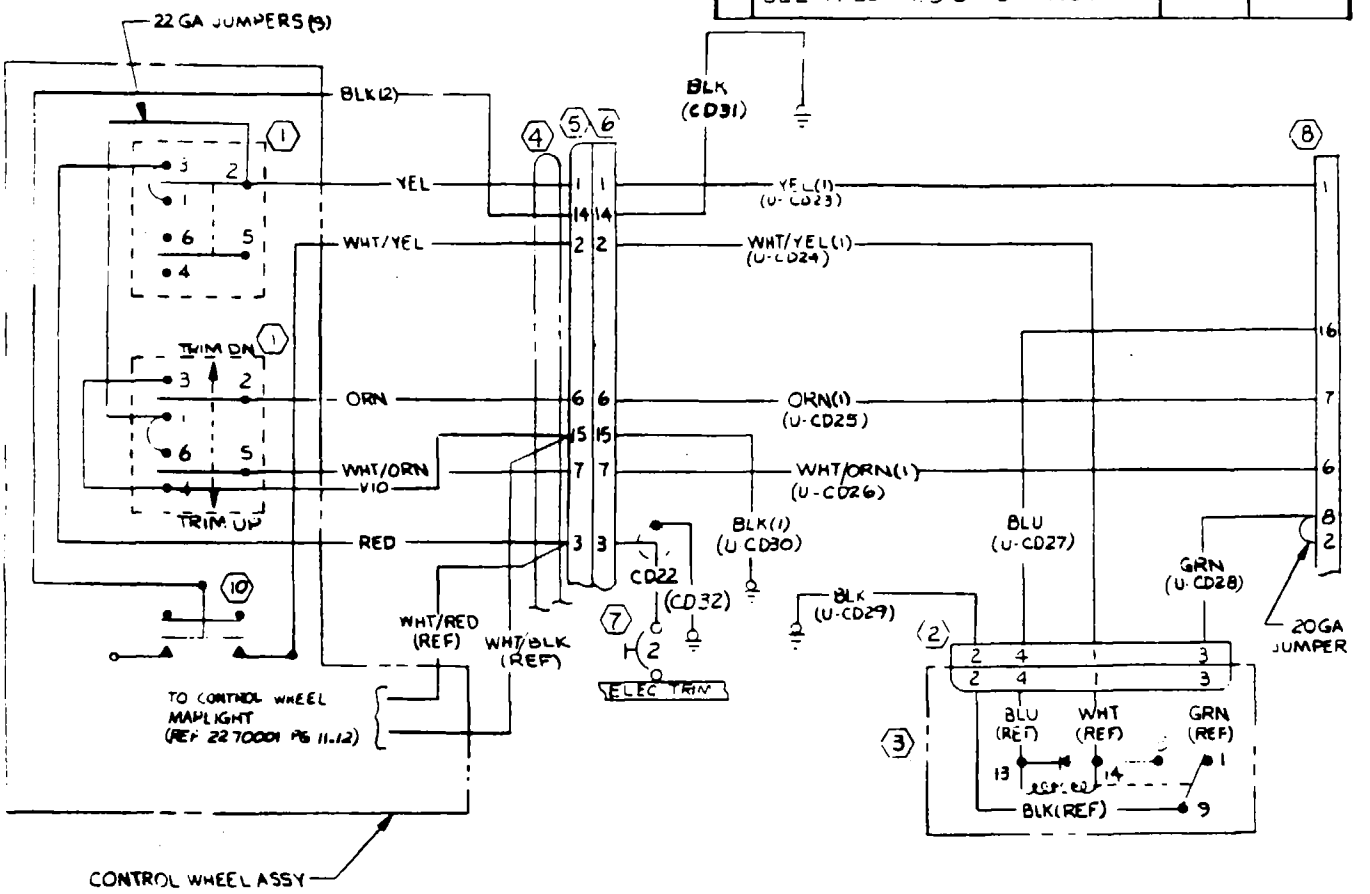

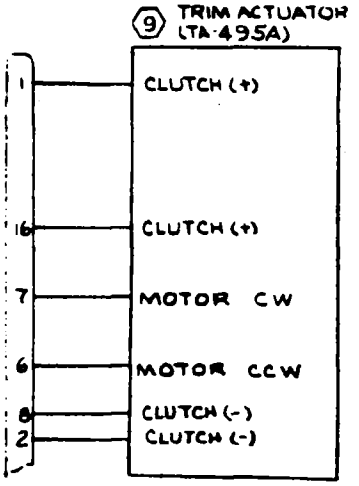

INACTIVE EFF THRU SER (SR10713) TMS 9-8-83

51-00916

CONTRACT NO.			Cessna AIRCRAFT CO.	PAWNEE DIVISION 5800 E PAWNEE WICHITA, KANSAS
	NAME	DATE	TITLE	WIRING DIAGRAM ELECTRIC TRIM (OPT)
DESIGN				
GROUP		7-16-81		
DRAWN	M.THOMPSON	7-10-81		
CHECK	BORLEY	7-13-81		
STRESS				
PROJ	SICHEL	7-21-81	SIZE C	CODE IDENT NO 71379 / DWG NO 2270001
APPD				
OTHER			SCALE NONE	(SR 9951) / PAGE 14.5.1

NOTES:
1. MATERIAL IS RCF5130B COIL CORD, (096906)

REVISION			
LET	DESCRIPTION	DATE	APPD

WIRE CODE NO	GA	MATERIAL	LG	TERMINALS		SERIALS
RED	24	1.		SOLDER	S-2353-2	
VIO						
WHT/ORN						
ORN						
WHT/YEL						
YEL						
BLK	24	1.		SOLDER	S-2353-2	
U-CD42	20			S-2099-9	S-2099-9	
U-CD40	18			S-2099-8	S-1367-8	
U-CD39	18			S-2099-8	S-1367-8	
U-CD38	20			S-2099-6	S-1367-8	
U-CD37	20			S-2099-6	S-2099-8	
U-CD36	20			S-2099-6	S-2099-9	
U-CD35	20			S-2099-9	S-2099-9	
U-CD34	20			S-2099-9	S-2099-9	
U-CD33	20			S-2099-9	S-2099-6	
U-CD32	18			SOLDER	S-1367-8	

WIRE TABLE

ITEM NO	PART NO.	DESCRIPTION
9	44430-3257	TRIM ACTUATOR
8	S-2349-1	CONNECTOR
7	S-1232-2	CIRCUIT BREAKER
6	S-1385-3	SWITCH
5	S-2350-3	CONNECTOR
4	2270030	CABLE ASSY
3	2270035	RELAY ASSY
2	S-2348-2	CONNECTOR
1	7205P4	SWITCH

EQUIPMENT TABLE

CES-1000 IS APPLICABLE
VENDOR CODES PER S-1400
CES-XXXX-CESSNA SPEC. NO
S-XXX OR CMXXXX-CESSNA
STD. NO.

SUPERSEDES: PG 14.5.0

SUPERSEDED BY:

CONTRACT NO:

	NAME	DATE
DESIGN	SPENCER	9-8-83
GROUP	[illegible]	9-21-83
DRAWN	SPENCER	9-8-83
CHECK	R E HAIR	9/12-83
STRESS		
PROJ	[illegible]	10-3-83
APPD	[illegible]	
OTHER		

Cessna. AIRCRAFT CO.
PAWNEE DIVISION
3800 E. PAWNEE
WICHITA KANSAS

TITLE
WIRING DIAGRAM —
ELECTRIC TRIM (OPT)

SIZE C | CODE IDENT NO 71379 | DWG NO 2270001

SCALE NONE | (SR 1713) | PAGE: 14.6.0

REVISION			
LET	DESCRIPTION	DATE	APPD
	SEE PAGE 14.6.0 FOR REV.		

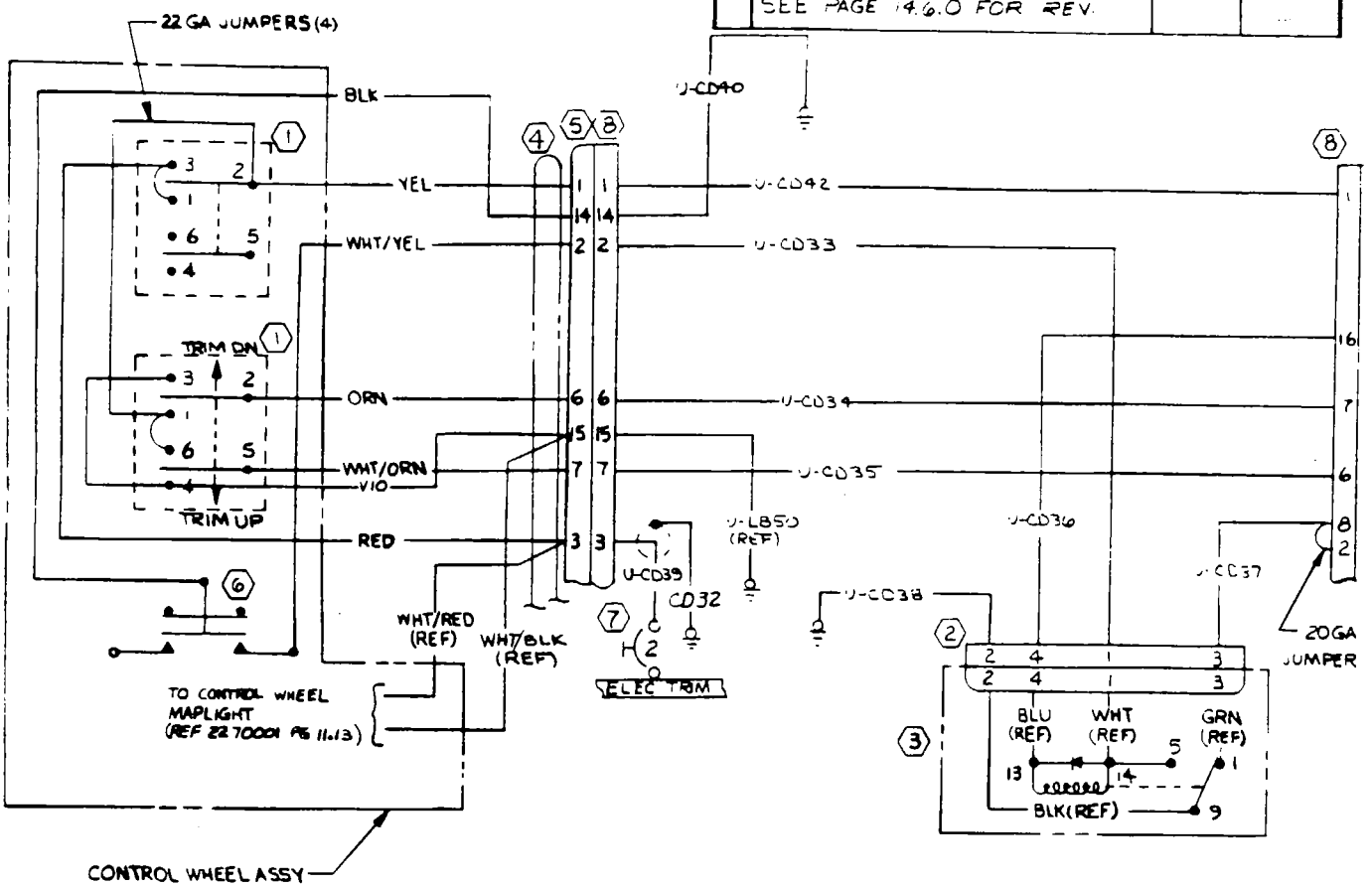

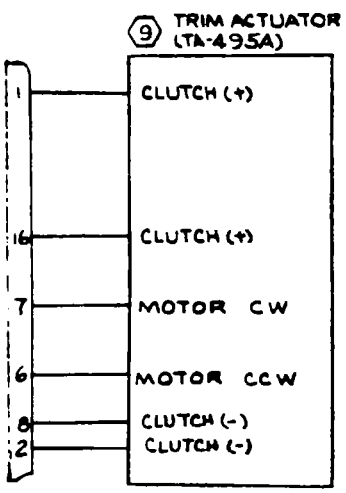

CONTRACT NO:			Cessna. AIRCRAFT CO.	PAWNEE DIVISION 5800 E. PAWNEE WICHITA KANSAS
	NAME	DATE	TITLE	
DESIGN	SPENCER	9-8-83	WIRING DIAGRAM ELECTRIC TRIM (OPT)	
GROUP	W. H. Hilden	9-21-83		
DRAWN	SPENCER	7-8-83		
CHECK	R E Hauz	7-11-83		
STRESS				
PROJ	J. P. Senaffel	10-3-83	SIZE C / CODE IDENT. NO 71379	DWG NO 2270001
APPD				
OTHER			SCALE NONE	(SR 5713) PAGE 14.6.1

NOTES:

1. SYSTEM SHOWN WITH LDG GEAR DOWN AND LOCKED, ACFT ON GROUND, & POWER OFF

REVISION			
LET	DESCRIPTION	DATE	APPD
A	BY REV: TERM. 3 WAS 2 & TERM 2 WAS 3/ VM920M-3; 0511062 WAS S-1672-2 & S-1367-1-8/GC10 WAS S-1367-1-4 S-1880-1/GC7 WAS S-1829-1 (SR8462) (REF)	DLP 8-18-77	JAB
B	BY REV: REACTIVATE DRAWING	DFS 5-19-80	
C	BY REV: ADD DETAIL A; ADD S-1232-5 & GC10 (SR10099)	REK 1-15-82	JAB

				GC10	22			S-1367-1-8	S-1636-1		SER (SR10099) & ON
				GC9	22		96	SEE GC3	S-1367-1-4		
				WIRE (GC10)	22	-22-0	15	S-1367-1-8	S-1367-1-4		
				GC1	22		76	S-1367-1-6	S-1636-1		THRU SER (SR10099)
				GC2	↓		81	S-1636-1	SOLDER		
				GC3	↓		103	S-1636-1	S-1635-1		
15	S-1232-5	CIRCUIT BREAKER		GC4	22		10	S-1636-1	SOLDER		
14	S-1906-1	SWITCH - FLAP WARNING									
13	C596510-0101	SPEAKER		WIRE (GC6)	22	-22-0	4	SOLDER	S-1367-1-8		
12	0511062	STALL DETECTOR (HTD)		WIRE (GC7)	↑	-22-6	43	S-1636-1	S-18304		
11	2LM-E	SWITCH		WIRE (GC8)		-22-0	12	S-1370-1	S-1367-1-6		
10	S-1377-1	SWITCH		FC1	↓		24	S-1636-1	S-1636-1		
9	VM920M-3	LIGHT		WIRE (FC2)	22	-22-0	4	S-1367-1-6	S-1367-1-8		
8	S-1672-1	STALL DETECTOR		WIRE (FC3)	18	-18-0	85	S-1635-1	S-1367-1-8		
7	S-1637-2	HOUSING		WIRE CODE NO.	GA	MATERIAL	LG	TERMINALS			SERIALS
6	S-1637-1	HOUSING		WIRE TABLE							
5	X15038-YE	MICRO SWITCH									
4	S-1360-5L	CIRCUIT BREAKER									
3	S-1641-6	HOUSING									
2	S-1640-6	HOUSING									
1	R70733	DUAL WARNING ASSY									
ITEM NO.	PART NO.	DESCRIPTION									
	EQUIPMENT TABLE										

CONTRACT NO:

	NAME	DATE
DESIGN	SPENCER	3-28-77
GROUP	D.H. Hardin	4-13-77
DRAWN	HARVEY	3-6-77
CHECK	J. YOUEL	5-18-77
STRESS		
PROJ	J.H. MOORE	4-4-77
APPD		
OTHER	/	

Cessna. AIRCRAFT CO. PAWNEE DIVISION 5800 E. PAWNEE WICHITA KANSAS

TITLE: WIRING DIAGRAM — LANDING GEAR & STALL WARNING SYSTEM

SIZE: C | CODE IDENT NO: 71379 | DWG NO: 2270001

SCALE: NONE | (SR8462) | PAGE: 15.1.0

CES-1000 IS APPLICABLE
VENDOR CODES PER S-1400
CES-XXXX-CESSNA SPEC. NO.
S-XXX OR CMXXXX-CESSNA STD. NO.

SUPERSEDES:

SUPERSEDED BY:

REVISION			
LET	DESCRIPTION	DATE	APPD
C	SEE P 5.1.0 FOR REVISION		

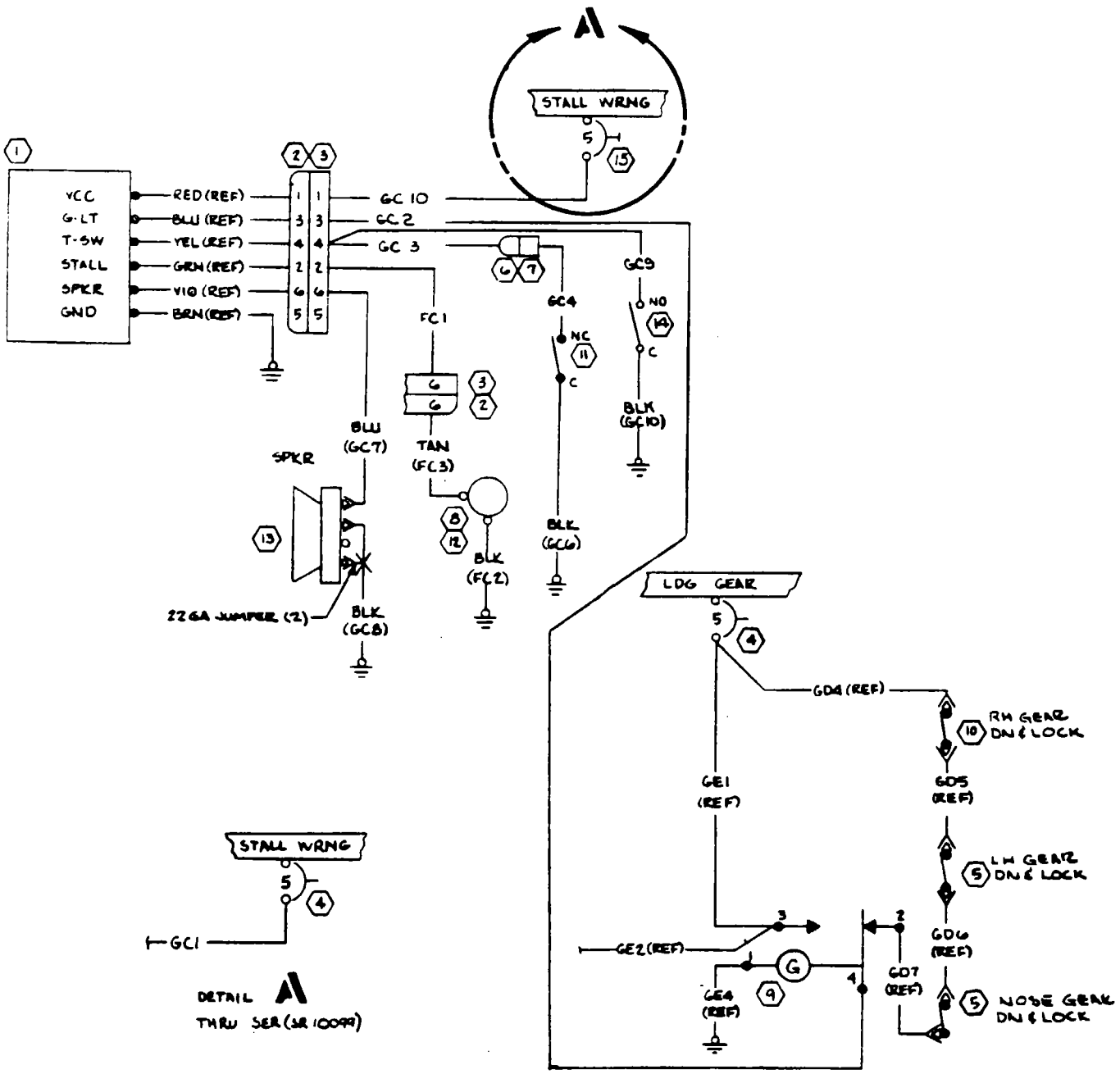

CONTRACT NO:			Cessna AIRCRAFT CO.	PAWNEE DIVISION 5800 E. PAWNEE WICHITA, KANSAS
	NAME	DATE	TITLE	WIRING DIAGRAM – LANDING GEAR & STALL WARNING SYSTEM
DESIGN	SPENCER	3-28-77		
GROUP		11-13-77		
DRAWN	HARVEY	3-16-77		
CHECK	J. YOUEL	3-18-77		
STRESS				
PROJ	J.L. MOORE	4-4-77	SIZE C	CODE IDENT. NO. 71379 / DWG NO. 2270001
APPD				
OTHER			SCALE: NONE	R182 / PAGE: 15.1.1

(SR8462)

REVISION			
LET	DESCRIPTION	DATE	APPD
A	BY REV: ADD C321C104M5U1CA CAPACITOR & C315C103M5U1CA CAPACITOR (SR8965)	NTL 2-16-79	

NOTES:

1. LM 340-12 VENDOR CODE 27014 MAY BE SUBSTITUTED FOR PN MC 7812-CP
2. SG555CN VENDOR CODE 34333, LM555CN VENDOR CODE 27014, OR SN72555P VENDOR CODE 01295 MAY BE SUBSTITUTED FOR PN MC 1455-P1
3. SOLDER CAPACITOR LEADS & 22 GA JUMPER TOGETHER & TERMINATE WITH S-1557-1 CAP

INACTIVE
EFF THRU SER (SR8970)
JJB 9-16-77

26	C315C103M5U1CA	CAPACITOR	
25	C321C104M5U1CA	CAPACITOR	
24	C023B101F103M	CAPACITOR	
23	S-1641-6	HOUSING-SOCKET	
22	S-1640-6	HOUSING-PIN	
21	2322410005002	POT	
20	1270730-1	PC BOARD	
19	S2000A122J	RESISTOR	
18	S2000A242J	RESISTOR	
17	S2000A393J	RESISTOR	
16	S2000A471J	RESISTOR	
15	S2000A102J	RESISTOR	
14	2322-410-03306	POT	
13	ET470X063A6	CAPACITOR	
12	1N2070	DIODE	
11	1N4001	DIODE	
10	2N4918	TRANSISTOR	
9	GE62F405	CAPACITOR	
8	T310B225K035AS	CAPACITOR	
7	T330B104K035AS	CAPACITOR	
6	T330B564K035AS	CAPACITOR	
5	UK25-103	CAPACITOR	
4	T330C106K025AS	CAPACITOR	
3	LM380N	INTEGRATED CKT	
2	MC1455-P1	INTEGRATED CKT	2
1	MC7812-CP	INTEGRATED CKT	1
ITEM NO	PART NO.	DESCRIPTION	

EQUIPMENT TABLE

WIRE CODE NO	GA	MATERIAL	LG	TERMINALS			SERIALS
ORN	22	BELDEN 8568		SOLDER	SOLDER		
RED (W)	↑	↑		↑	SOLDER		
BRN (O)					SOLDER		
VIO			6		S-1635-1		
RED			6		S-1635-1		
BRN			6		S-1367-2-4		
YEL			6		S-1635-1		
BLU	↑	↑	6	↑	S-1635-1		
GRN	22	BELDEN 8568		SOLDER	S-1635-1		

WIRE TABLE

CES-1000 IS APPLICABLE
VENDOR CODES PER S-1400
CES-XXXX=CESSNA SPEC. NO.
S-XXX OR CMXXXX=CESSNA STD. NO.

SUPERSEDES.

SUPERSEDED BY: PAGE 15.3

CONTRACT NO.

	NAME	DATE
DESIGN	SPENCER	3-28-77
GROUP	W. H. Harden	4-13-77
DRAWN	HARVEY	3-16-77
CHECK	J. YOUEL	3-18-77
STRESS		
PROJ	L. MOORE	4-14-77
APPD		
OTHER		

Cessna. AIRCRAFT CO.
COMMERCIAL AIRCRAFT DIV.
5800 E. PAWNEE
WICHITA, KANSAS

TITLE
WIRING DIAGRAM — SCHEMATIC DUAL WARNING UNIT

SIZE	CODE IDENT NO.	DWG NO
C	71379	2270001

SCALE NONE | (SR8962) | PAGE 15.2

Schematic Dual Warning Unit (Sheet 1 of 2)

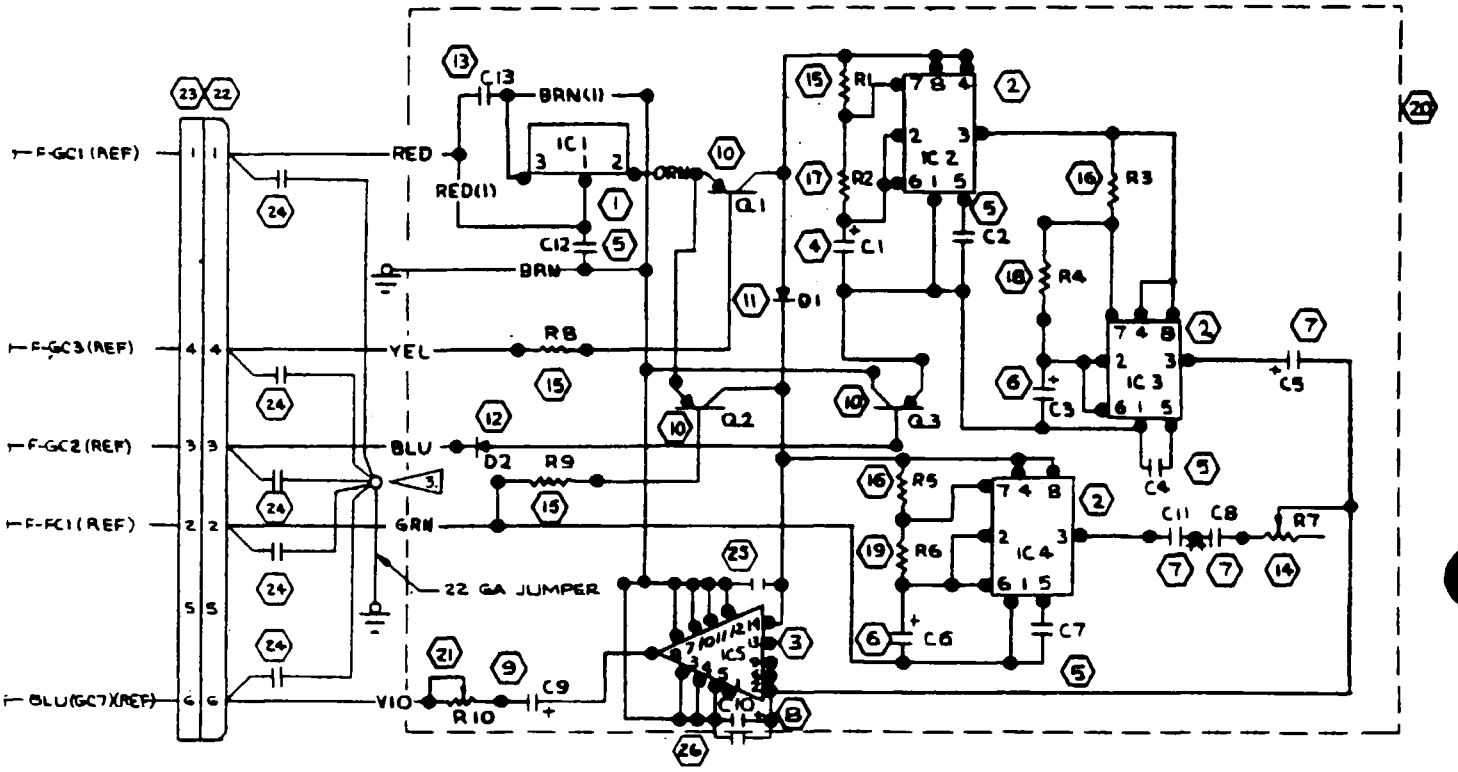

INACTIVE
EFF THRU SER (SR8970)
JJB 9-16-77

CONTRACT NO:			Cessna AIRCRAFT CO.	COMMERCIAL AIRCRAFT DIV. 5800 E. PAWNEE WICHITA, KANSAS
	NAME	DATE	TITLE	WIRING DIAGRAM — SCHEMATIC DUAL WARNING UNIT
DESIGN	SPENCER	3-28-77		
GROUP	W. H. Dryden	4-7-77		
DRAWN	HARVEY	3-16-77		
CHECK	J. YOUEL	3-18-77		
STRESS				
PROJ	J. H. MONROE	4-4-77	SIZE C	CODE IDENT. NO. 71379 / DWG NO 2270001
APPD	ARS			
OTHER			SCALE: NONE	(SR8962) / PAGE: 15 2

Schematic Dual Warning Unit (Sheet 2 of 2)

REVISION			
LET	DESCRIPTION	DATE	APPD
A	BY REV: ADD C321C104M5U1CA CAPACITOR & C315C103M5U1CA CAPACITOR (SR9465)	NTL 2-16-79	
B	BY REV: S-2493-12 WAS MC7812CP, S-2437-1 WAS MC1455P1 (NOW SHOP PRACTICE)	RLY 1-23-80	

NOTES:

1. _M340-12 VENDOR CODE 27014 MAY BE SUBSTITUTED FOR PN MC7812-CP
2. SG555CN VENDOR CODE 34333, LM555CN VENDOR CODE 27014, OR SN72555P VENDOR CODE 01295 MAY BE SUBSTITUTED FOR PN MC1455-P1

ITEM NO	PART NO	DESCRIPTION	
24	C315C103M5U1CA	CAPACITOR	
23	C321C104M5U1CA	CAPACITOR	
22	S-1641-6	HOUSING-SOCKET	
21	S-1640-6	HOUSING-PIN	
20	1270730	PC BOARD	
19	S2000A122J	RESISTOR	
18	S2000A242J	RESISTOR	
17	S2000A393J	RESISTOR	
16	S2000A471J	RESISTOR	
15	S2000A102J	RESISTOR	
14	2322-410-03308	POT	
13	ET470X063A6	CAPACITOR	
12	1N2070	DIODE	
11	1N4001	DIODE	
10	2N4918	TRANSISTOR	
9	GE62F405	CAPACITOR	
8	T310B225K035AS	CAPACITOR	
7	T330B104K035AS	CAPACITOR	
6	T330B564K035AS	CAPACITOR	
5	UK25-103	CAPACITOR	
4	T330C106K025AS	CAPACITOR	
3	LM 380 N	INTEGRATED CKT	
2	S-2437-1	INTEGRATED CKT	2
1	S-2493-12	INTEGRATED CKT	1

EQUIPMENT TABLE

WIRE CODE NO	GA	MATERIAL	LG	TERMINALS		SERIALS
ORN	22	BELDEN 8568		SOLDER	SOLDER	
RED(1)	↓	↓		↓	SOLDER	
BRN(1)					SOLDER	
VIO					S-1635-1	
RED					S-1635-1	
BRN					S-1361-2-4	
YEL					S-1635-1	
BLU	↓	↓		↓	S-1635-1	
GRN	22	BELDEN 8568		SOLDER	S-1635-1	

WIRE TABLE

CES-1000 IS APPLICABLE
VENDOR CODES PER S-1400
CES-XXXX=CESSNA SPEC. NO.
S-XXX OR CMXXXX=CESSNA STD NO.

SUPERSEDES: PAGE 15.2

SUPERSEDED BY:

CONTRACT NO.

	NAME	DATE
DESIGN		
GROUP		10-3-77
DRAWN	BLISS	9-16-77
CHECK	BORLESKE	9-19-77
STRESS		
PROJ	J. MOORE	10-3-77
APPD		
OTHER		

Cessna AIRCRAFT CO.
COMMERCIAL AIRCRAFT DIV.
5800 E. PAWNEE
WICHITA, KANSAS

TITLE: WIRING DIAGRAM — SCHEMATIC DUAL WARNING UNIT

SIZE	CODE IDENT NO	DWG NO
C	71379	2270001

SCALE: NONE | R182 | PAGE: 15.3

(SR8970)

Schematic Dual Warning Unit (Sheet 1 of 2)

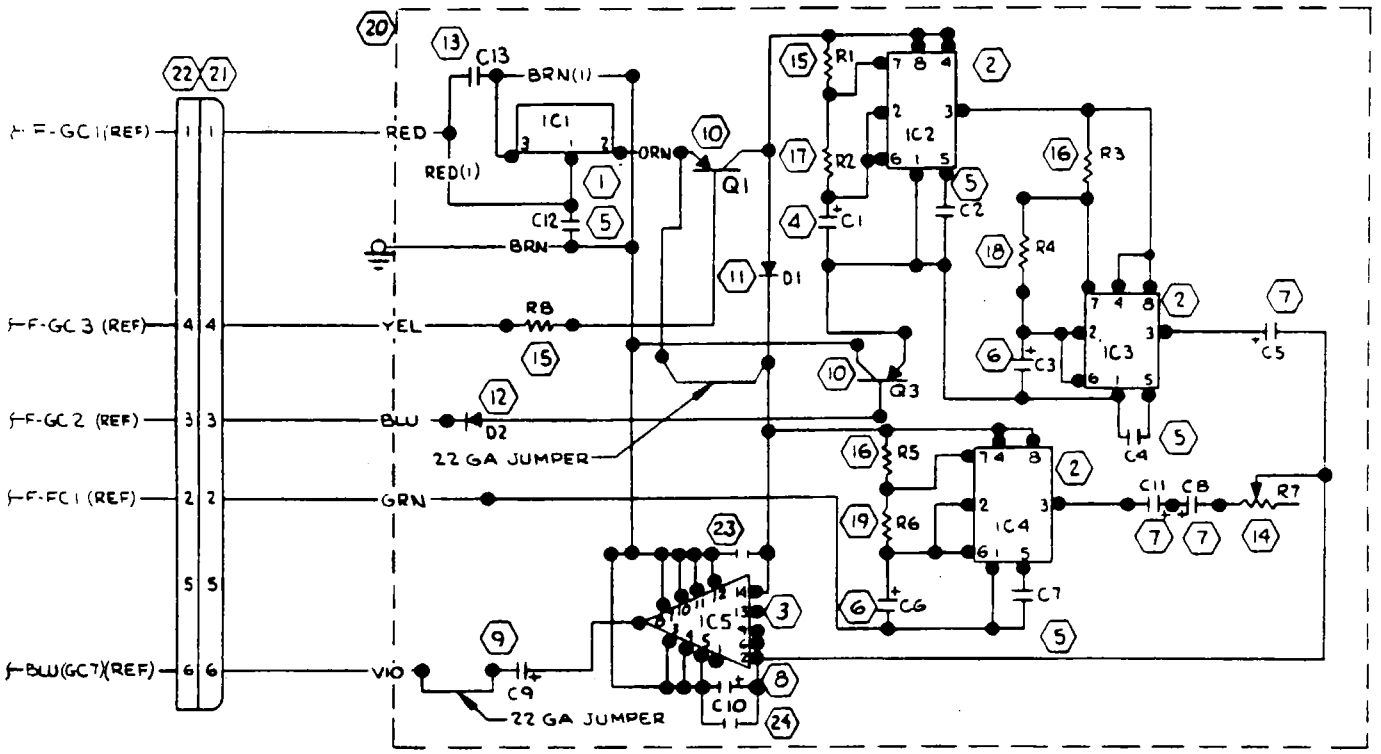

CONTRACT NO:			Cessna AIRCRAFT CO.	COMMERCIAL AIRCRAFT DIV. 5800 E. PAWNEE WICHITA, KANSAS
	NAME	DATE	TITLE	WIRING DIAGRAM — SCHEMATIC DUAL WARNING UNIT
DESIGN				
GROUP		10-3-77		
DRAWN	BLISS	9-16-77		
CHECK	BORLESKE	9-19-77		
STRESS				
PROJ	J.J. MOORE	10-3-77	SIZE C	CODE IDENT NO. 71379 / DWG NO 2270001
APPD				
OTHER			SCALE: NONE	R182 / PAGE: 15.3

(SR8970)

Schematic Dual Warning Unit (Sheet 2 of 2)

REVISION			
LET	DESCRIPTION	DATE	APPD

NOTES:

1. TERMINATE VENDOR FURNISHED WIRES WITH S-1636-1 PIN.
2. VACUUM SWITCH CONTACTS ARE NORMALLY CLOSED; CONTACTS OPEN AT 3.5±1 INCHES OF MERCURY VACUUM

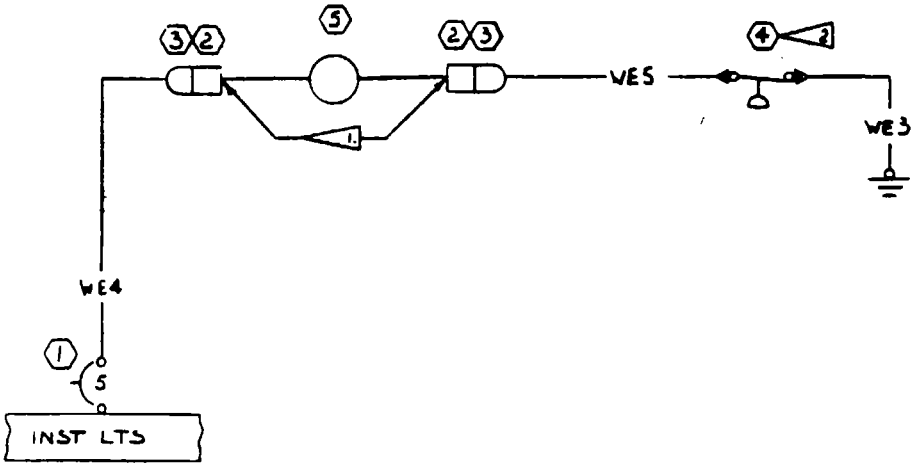

WIRE CODE NO	GA	MATERIAL	LG	TERMINALS			SERIALS
WE 5	22			S-1635-1	S-1493-1		
WE 4	22			S-1367-1-6	S-1635-1		
WE 3	22			S-1493-1	S-1367-1-8		

WIRE TABLE

ITEM NO	PART NO	DESCRIPTION	
5	S-2135-2	LAMP	
4	S-2571-2	VACUUM SWITCH	
3	S-1637-1	HOUSING	
2	S-1637-2	HOUSING	
	S-1360-5L	CIRCUIT BREAKER	

EQUIPMENT TABLE

CES-1000 IS APPLICABLE
VENDOR CODES PER S-1400
CES-XXXX-CESSNA SPEC. NO.
S-XXX OR CMXXXX-CESSNA
STD. NO.

SUPERSEDES:

SUPERSEDED BY:

CONTRACT NO:

	NAME	DATE
DESIGN	R KLEIN	11-20-81
GROUP	W. DALE	1-19-82
DRAWN	R KLEIN	11-20-81
CHECK	R ORLESKE	1-19-82
STRESS	L BHOIL	1-18-82
PROJ		1-19-82
APPD		
OTHER		

Cessna AIRCRAFT CO.
PAWNEE DIVISION
5800 E PAWNEE
WICHITA KANSAS

TITLE
WIRING DIAGRAM — VACUUM OUT WARNING SYSTEM - R182, TR182

SIZE	CODE IDENT NO	DWG NO
C	71379	2270001

SCALE NONE (SR10099) PAGE: 15.5

REVISION			
LET	DESCRIPTION	DATE	APPD

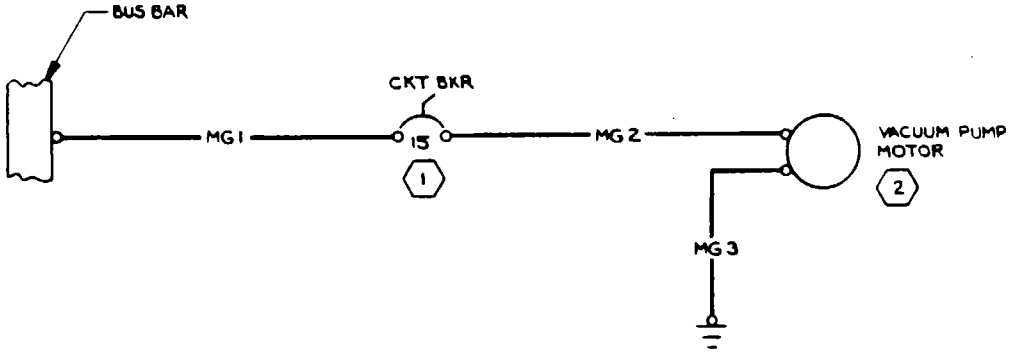

15-00916

WIRE CODE NO.	GA	MATERIAL	LG	TERMINALS			SERIALS
MG 3	16	S-2589		S-1367-2-8	S-1367-2-6		
MG 2	16	S-2589		S-1367-2-8	S-1367-2-8		
MG 1	16	S-2589		S-1367-2-8	S-1367-2-8		

WIRE TABLE

	PART NO.	DESCRIPTION
2	C165008-0101	VACUUM PUMP
1	CM3589-15	CKT BKR

EQUIPMENT TABLE

CESS-1000 IS APPLICABLE
VENDOR CODES PER S-1400
CESS-XXXX-CESSNA SPEC. NO.
S-XXX OR CXXXXX-CESSNA STD. NO.

SUPERSEDES:

SUPERSEDED BY:

CONTRACT NO:

	NAME	DATE
DESIGN	W.H. LINDEN	10-31-84
GROUP	D. H. HAREDEN	10-31-84
DRAWN	KEN LUNDY	10-3-84
CHECK	R. E. HART	10-16-84
STRESS		
PROJ		11-1-84
APPD	MOP	11-1-84
OTHER		

Cessna AIRCRAFT CO.
PAWNEE DIVISION
5000 E. PAWNEE
WICHITA, KANSAS

TITLE
WIRING DIAGRAM —
STANDBY VACUUM PUMP
MODEL R182

SIZE	CODE IDENT. NO.	DWG NO
C	71379	2270001

SCALE: NONE (SR 10415) PAGE: 16-1